CHAPTER 3

Diodes

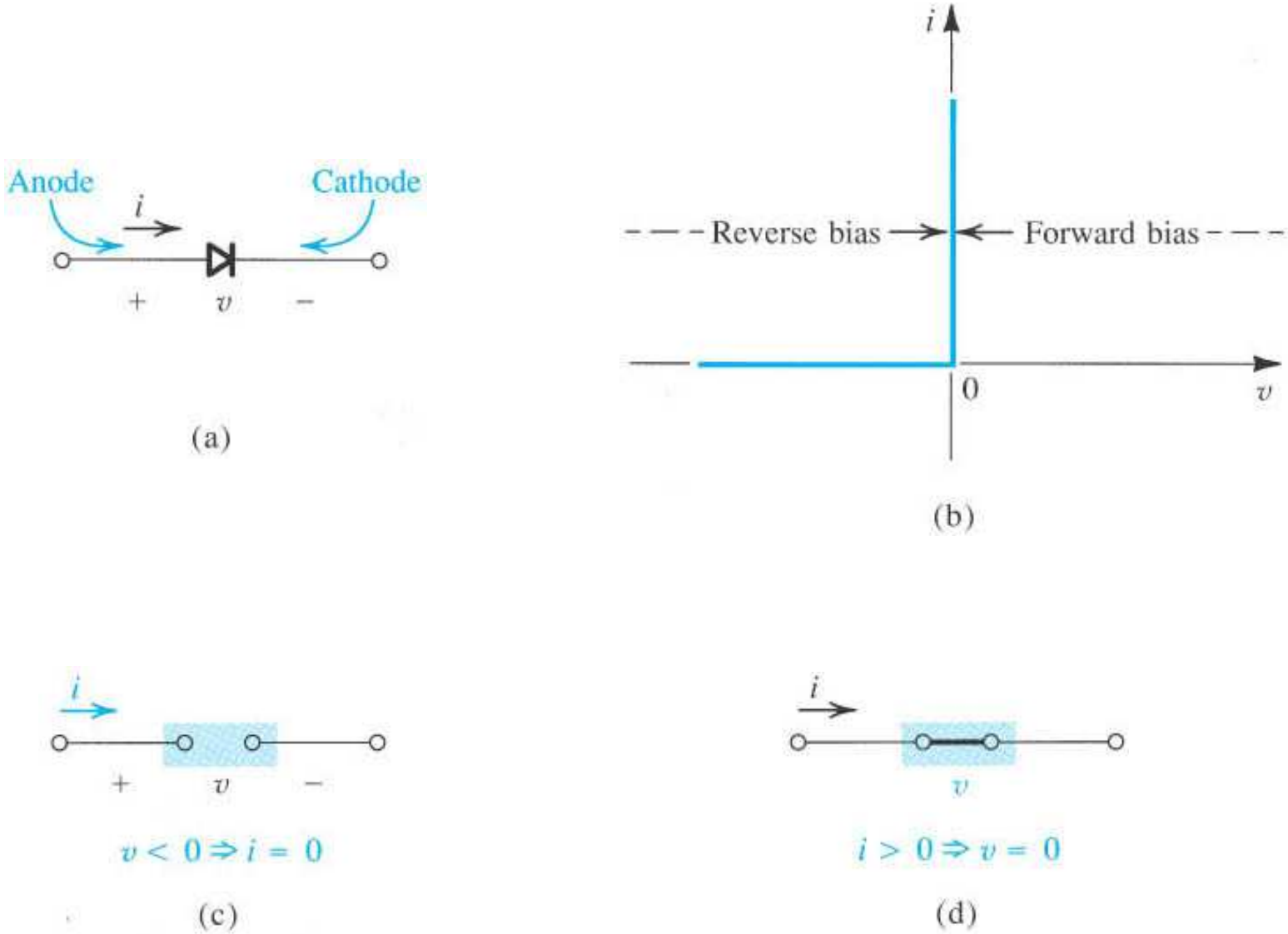

Figure 3.1 The ideal diode: **(a)** diode circuit symbol; **(b)** i–v characteristic; **(c)** equivalent circuit in the reverse direction; **(d)** equivalent circuit in the forward direction.

 Copyright © 2004 by Oxford University Press, Inc.

Basic knowledge

- $V = IR$ (V – voltage, I – current, R – resistance)
- Kirchhoff's current law (Wikipedia.org)
  - for any node (junction) in an electrical circuit, the sum of currents flowing into that node is equal to the sum of currents flowing out of that node; or equivalently:

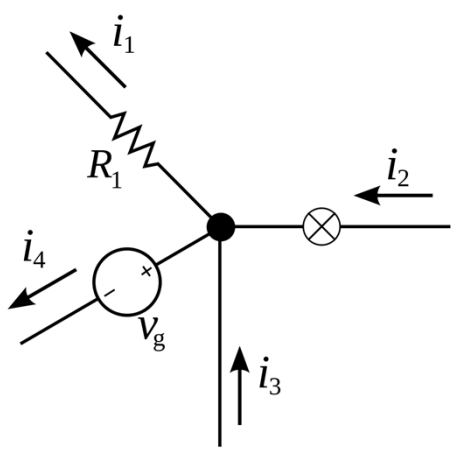

Source: Wikipedia.org

The current entering any junction is equal to the current leaving that junction. $i_2 + i_3 = i_1 + i_4$

Copyright © 2004 by Oxford University Press, Inc.

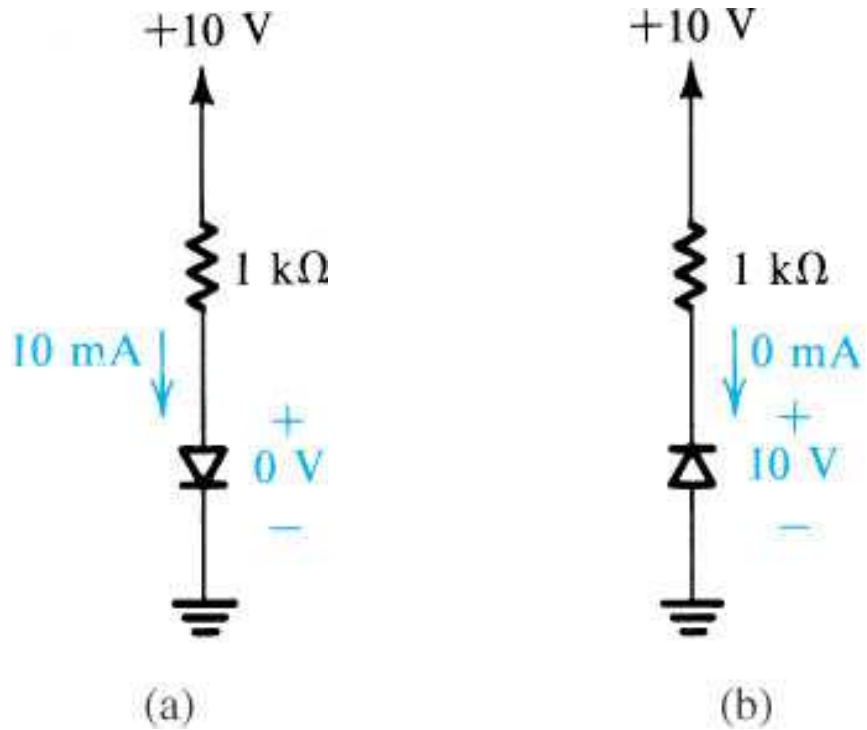

Figure 3.2 The two modes of operation of ideal diodes and the use of an external circuit to limit the forward current **(a)** and the reverse voltage **(b)**.

 Copyright © 2004 by Oxford University Press, Inc.

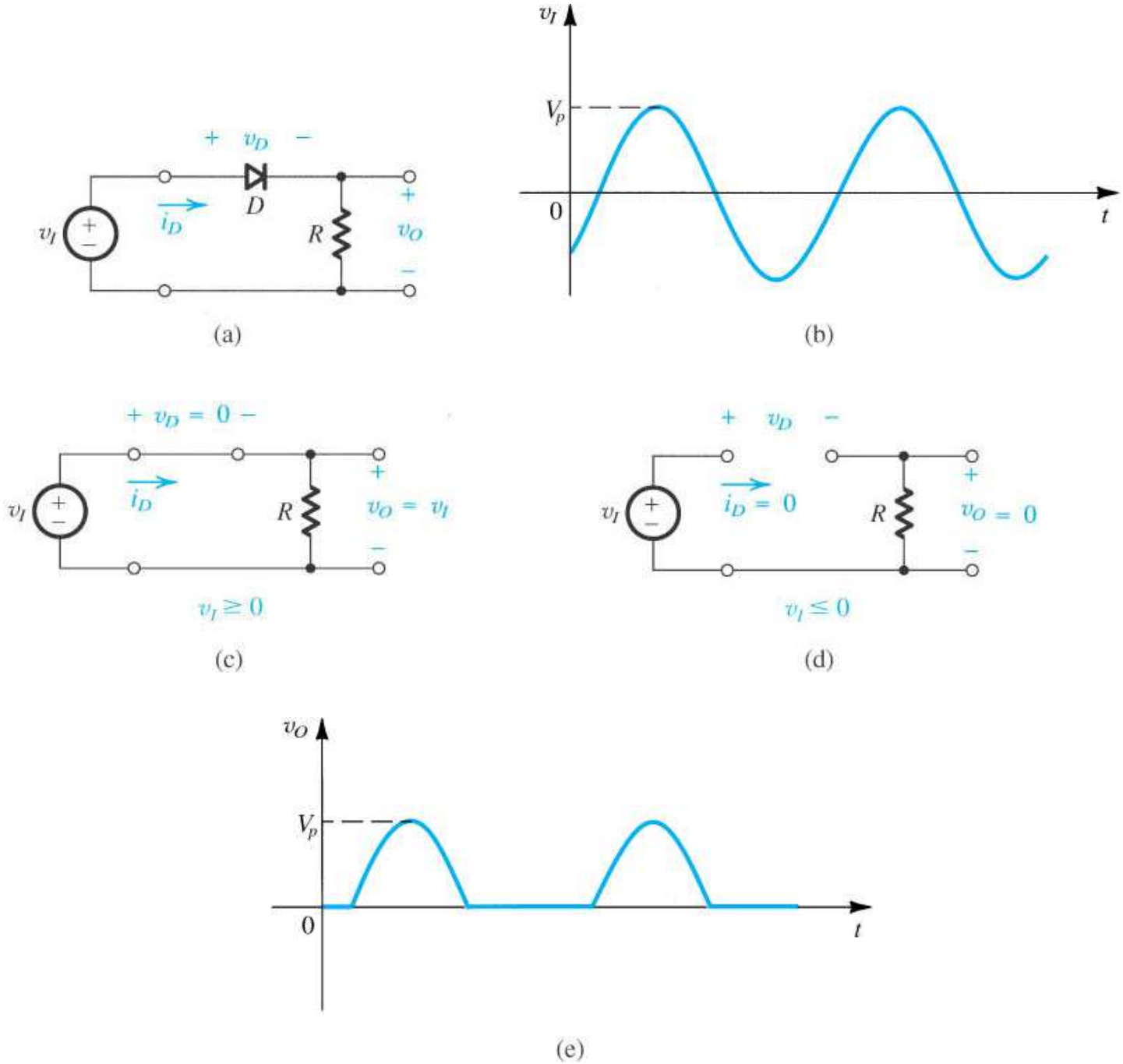

Figure 3.3 **(a)** Rectifier circuit. **(b)** Input waveform. **(c)** Equivalent circuit when $v_I \geq 0$. **(d)** Equivalent circuit when v_I ≤ 0. **(e)** Output waveform.

 Copyright © 2004 by Oxford University Press, Inc.

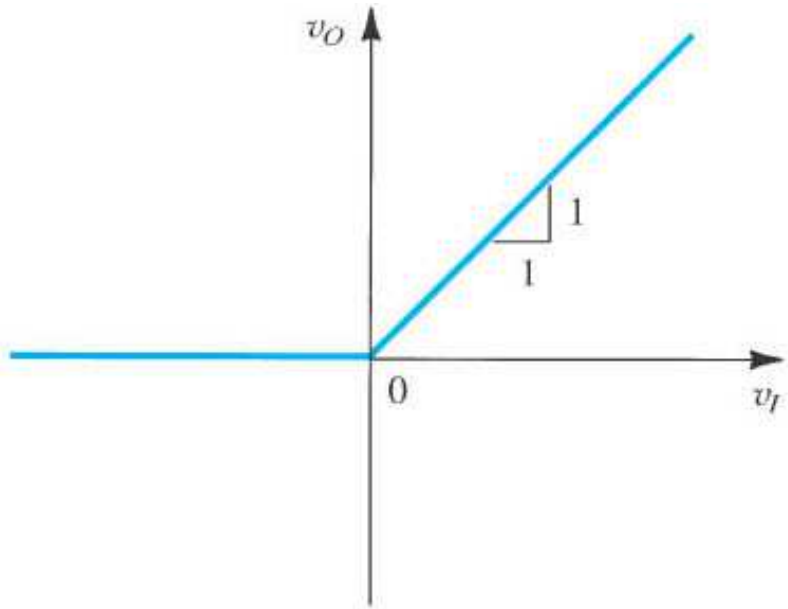

Figure E3.1

 Copyright © 2004 by Oxford University Press, Inc.

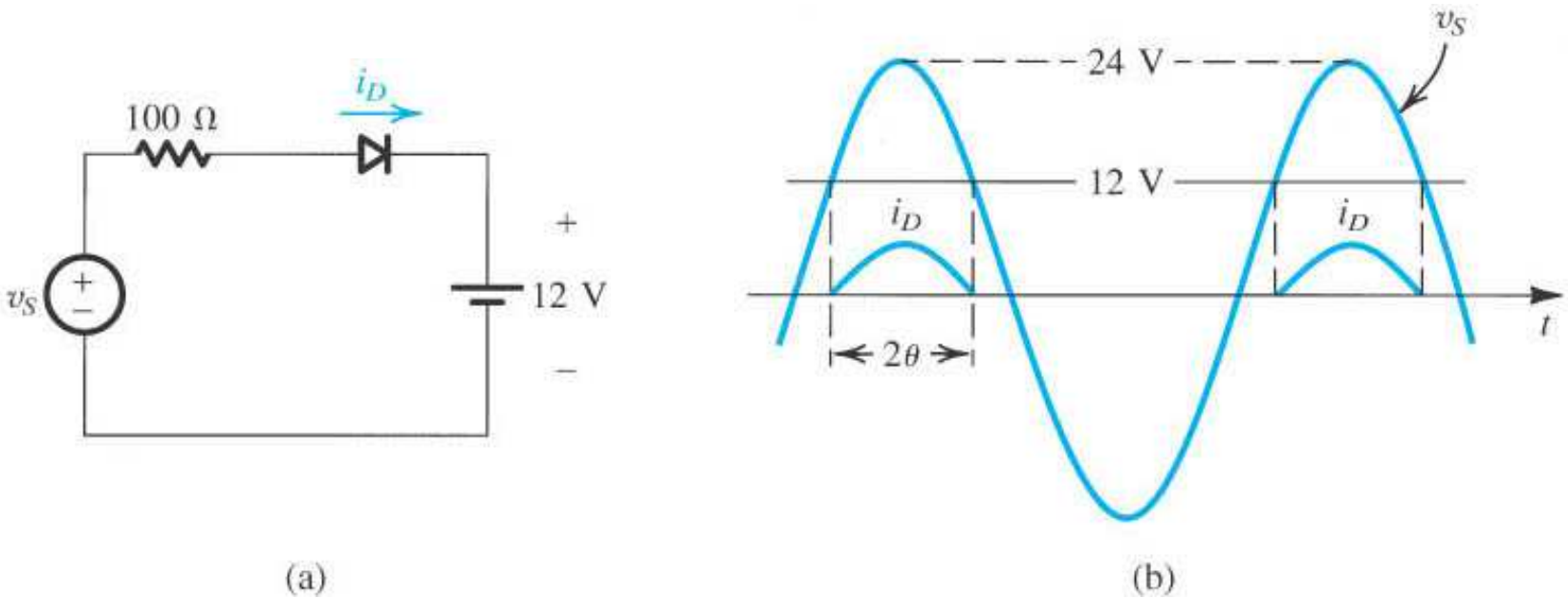

Figure 3.4 Circuit and waveforms for Example 3.1.

 Copyright © 2004 by Oxford University Press, Inc.

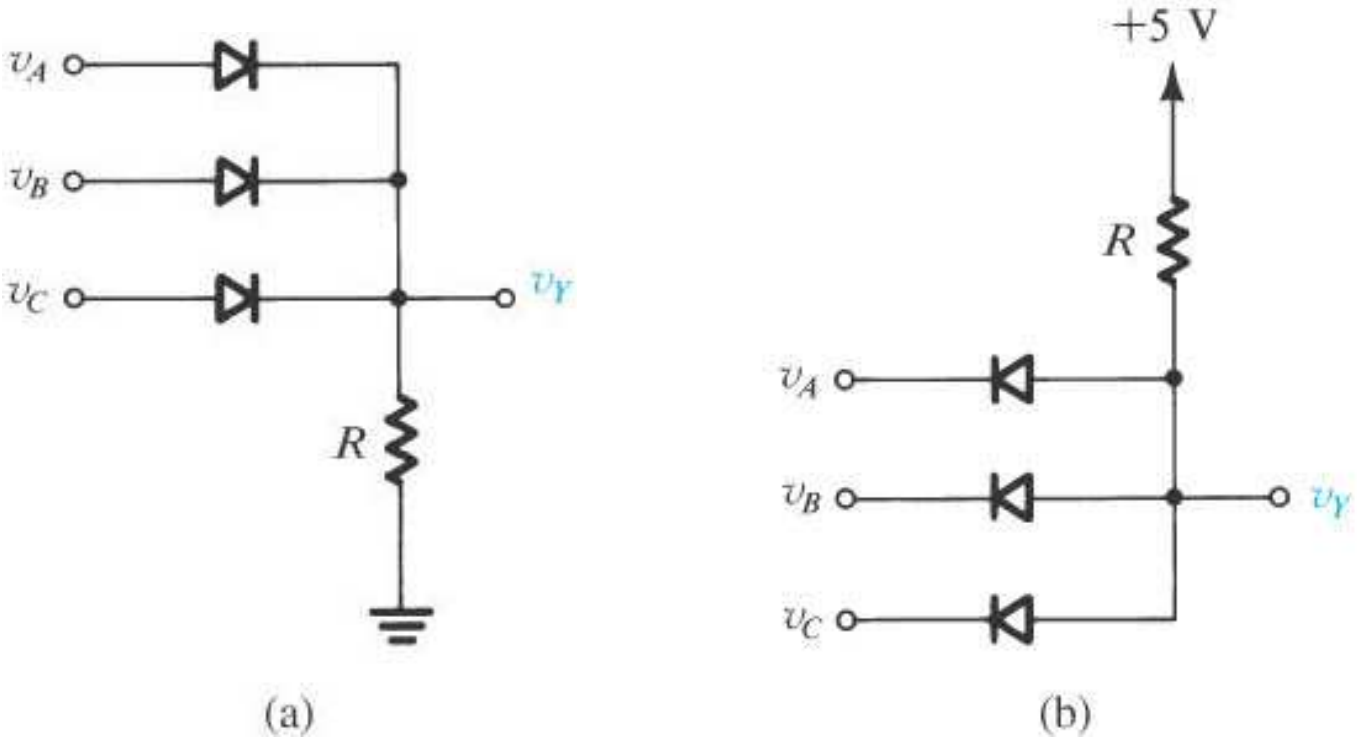

Figure 3.5 Diode logic gates: **(a)** OR gate; **(b)** AND gate (in a positive-logic system).

 Copyright © 2004 by Oxford University Press, Inc.

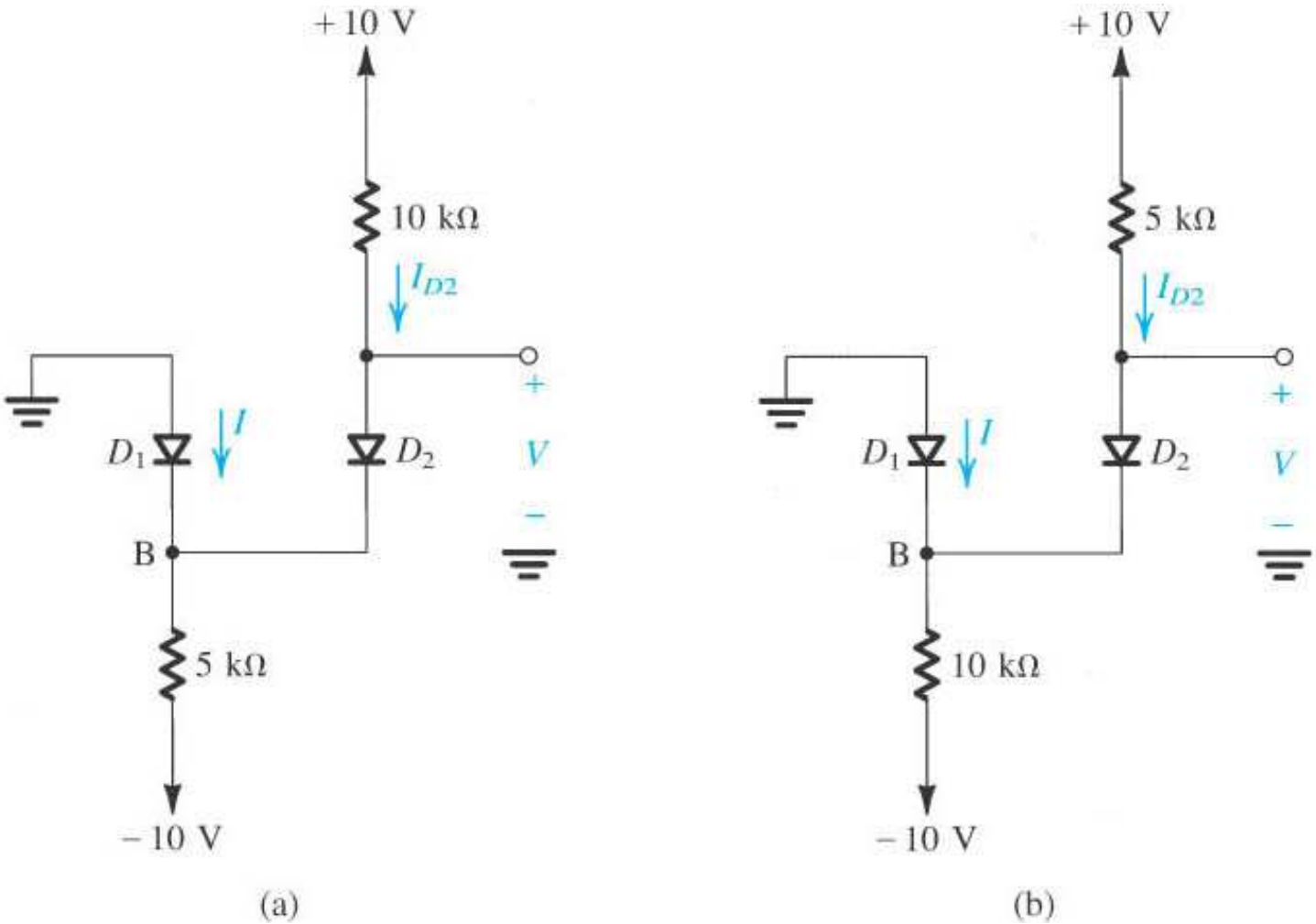

Figure 3.6 Circuits for Example 3.2.

 Copyright © 2004 by Oxford University Press, Inc.

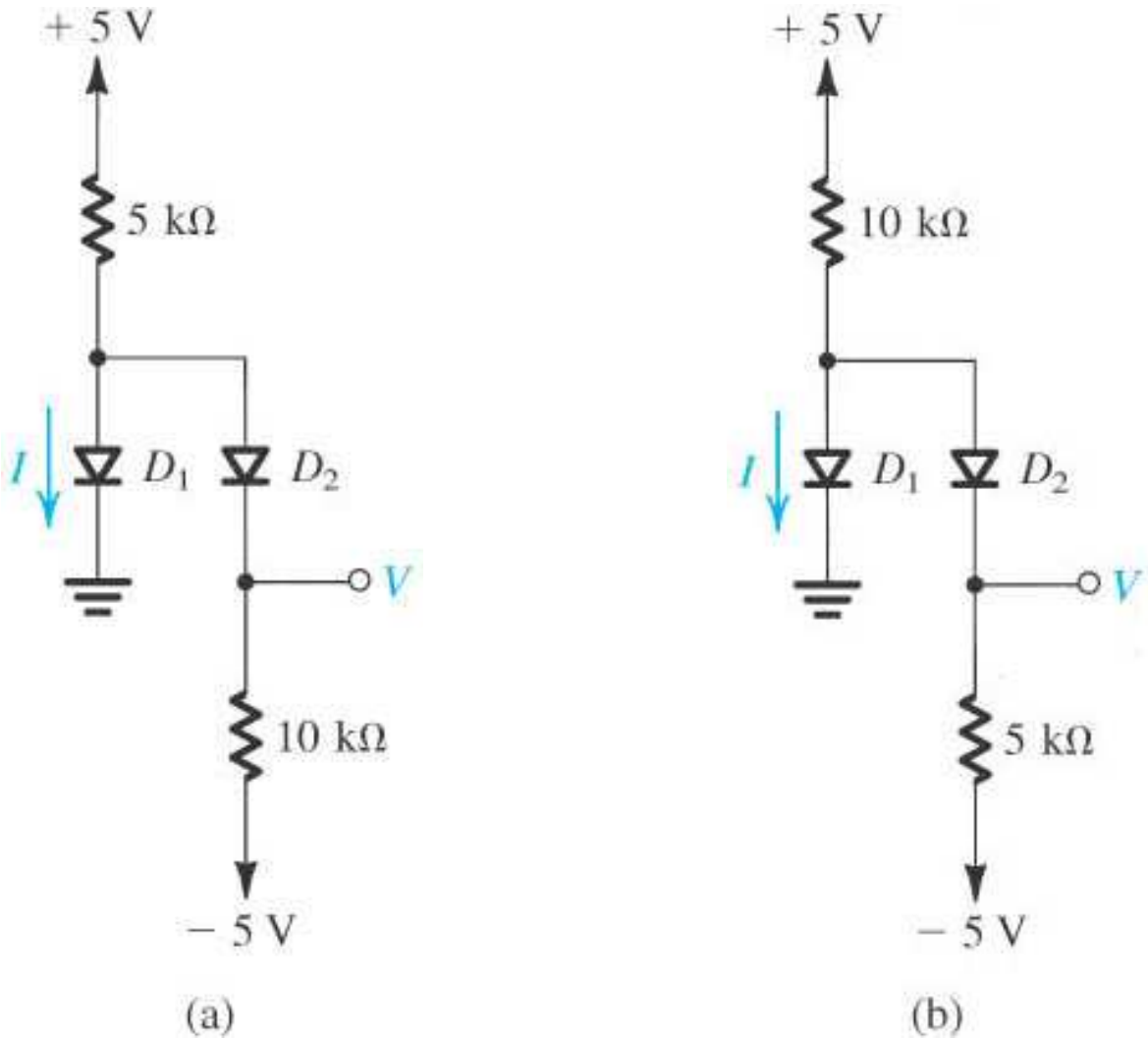

Figure P3.9

 Copyright © 2004 by Oxford University Press, Inc.

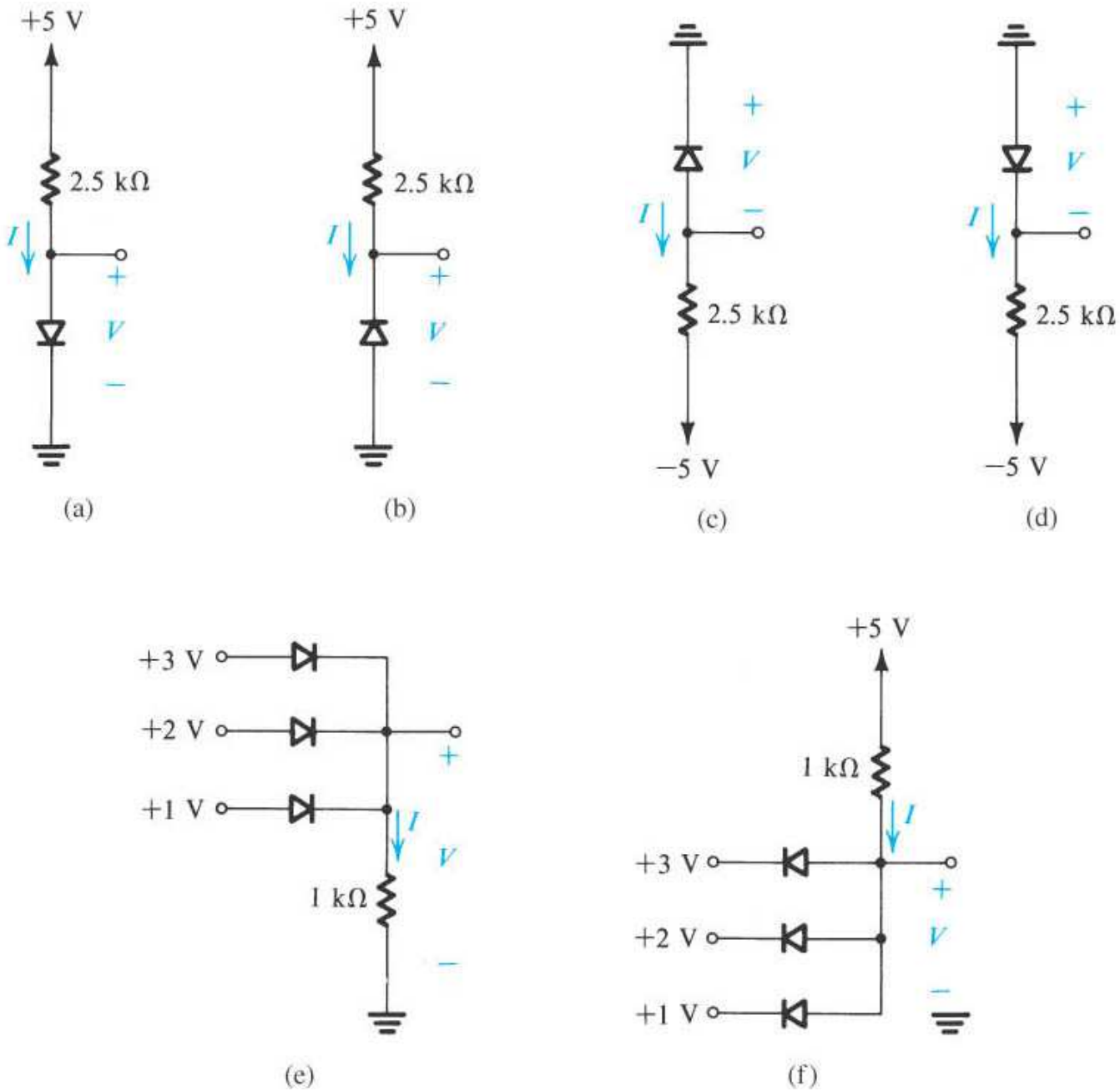

Figure E3.4

 Copyright © 2004 by Oxford University Press, Inc.

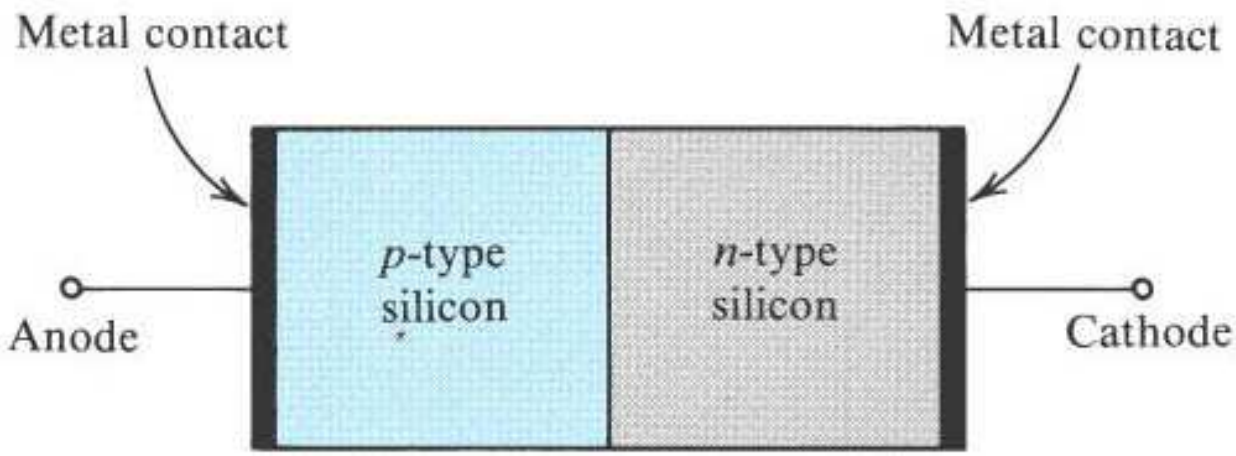

Figure 3.39 Simplified physical structure of the junction diode. (Actual geometries are given in Appendix A.)

 Copyright © 2004 by Oxford University Press, Inc.

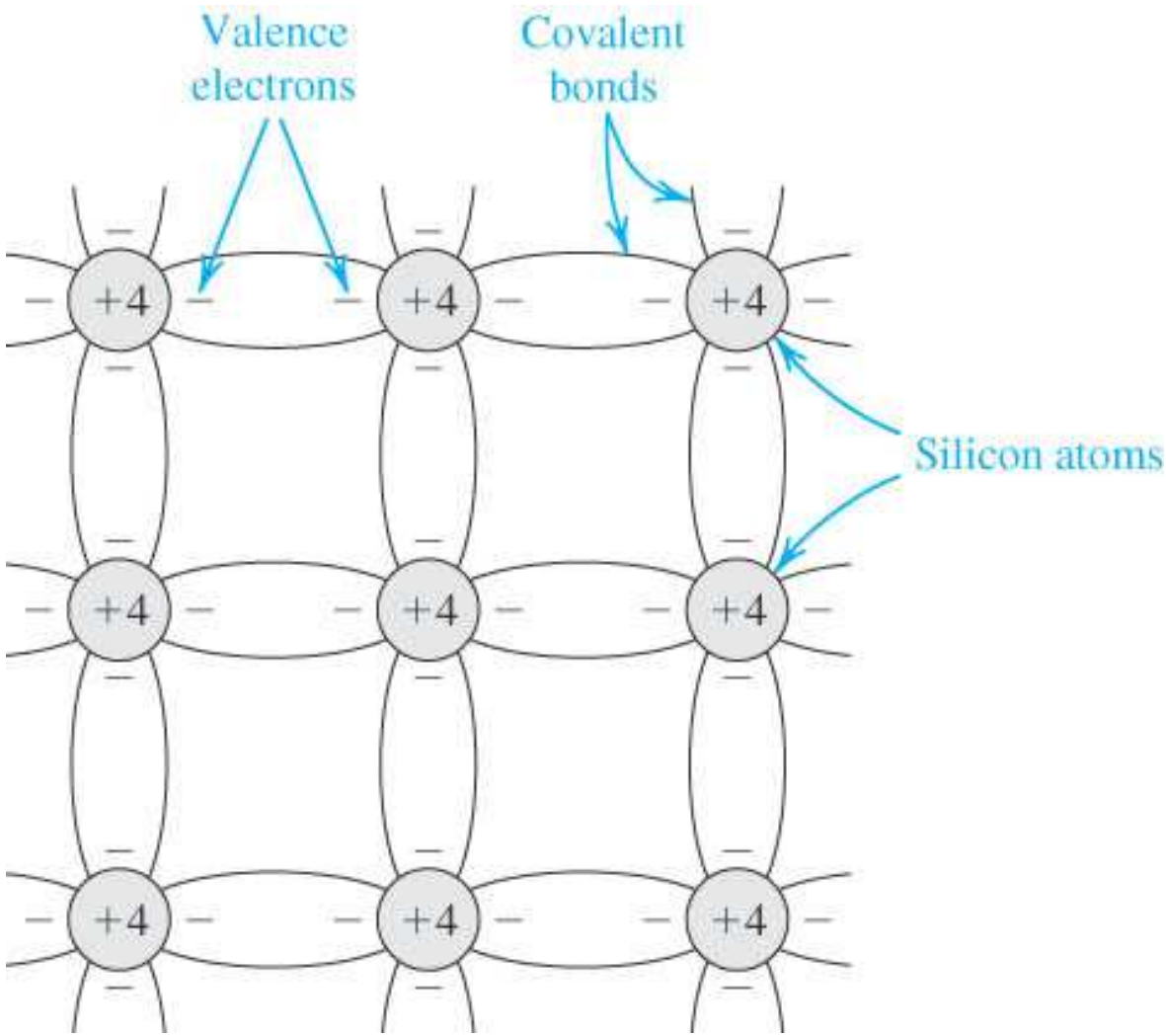

Figure 3.40 Two-dimensional representation of the silicon crystal. The circles represent the inner core of silicon atoms, with +4 indicating its positive charge of +4q, which is neutralized by the charge of the four valence electrons. Observe how the covalent bonds are formed by sharing of the valence electrons. At 0 K, all bonds are intact and no free electrons are available for current conduction.

 Copyright © 2004 by Oxford University Press, Inc.

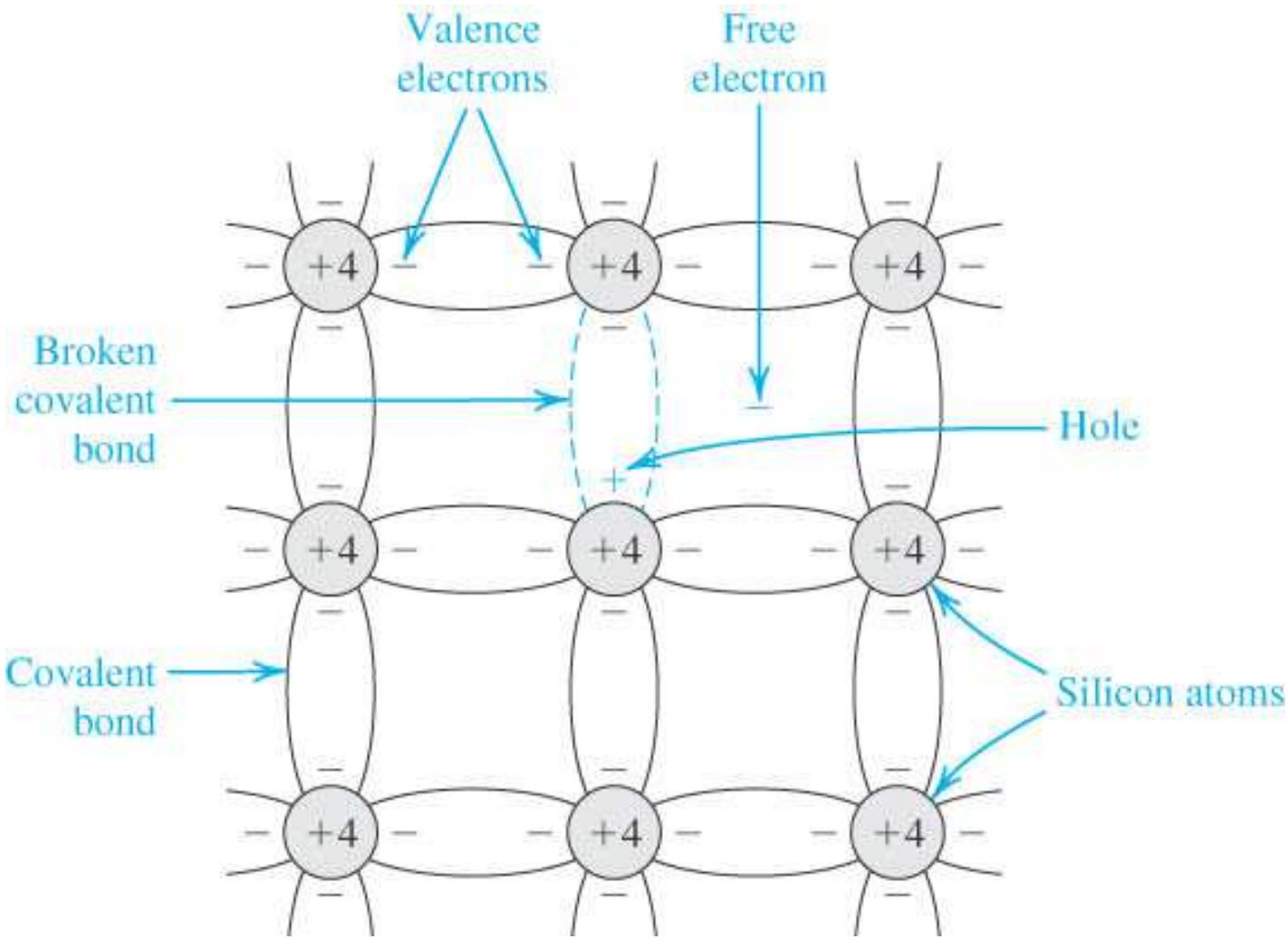

Figure 3.41 At room temperature, some of the covalent bonds are broken by thermal ionization. Each broken bond gives rise to a free electron and a hole, both of which become available for current conduction.

 Copyright © 2004 by Oxford University Press, Inc.

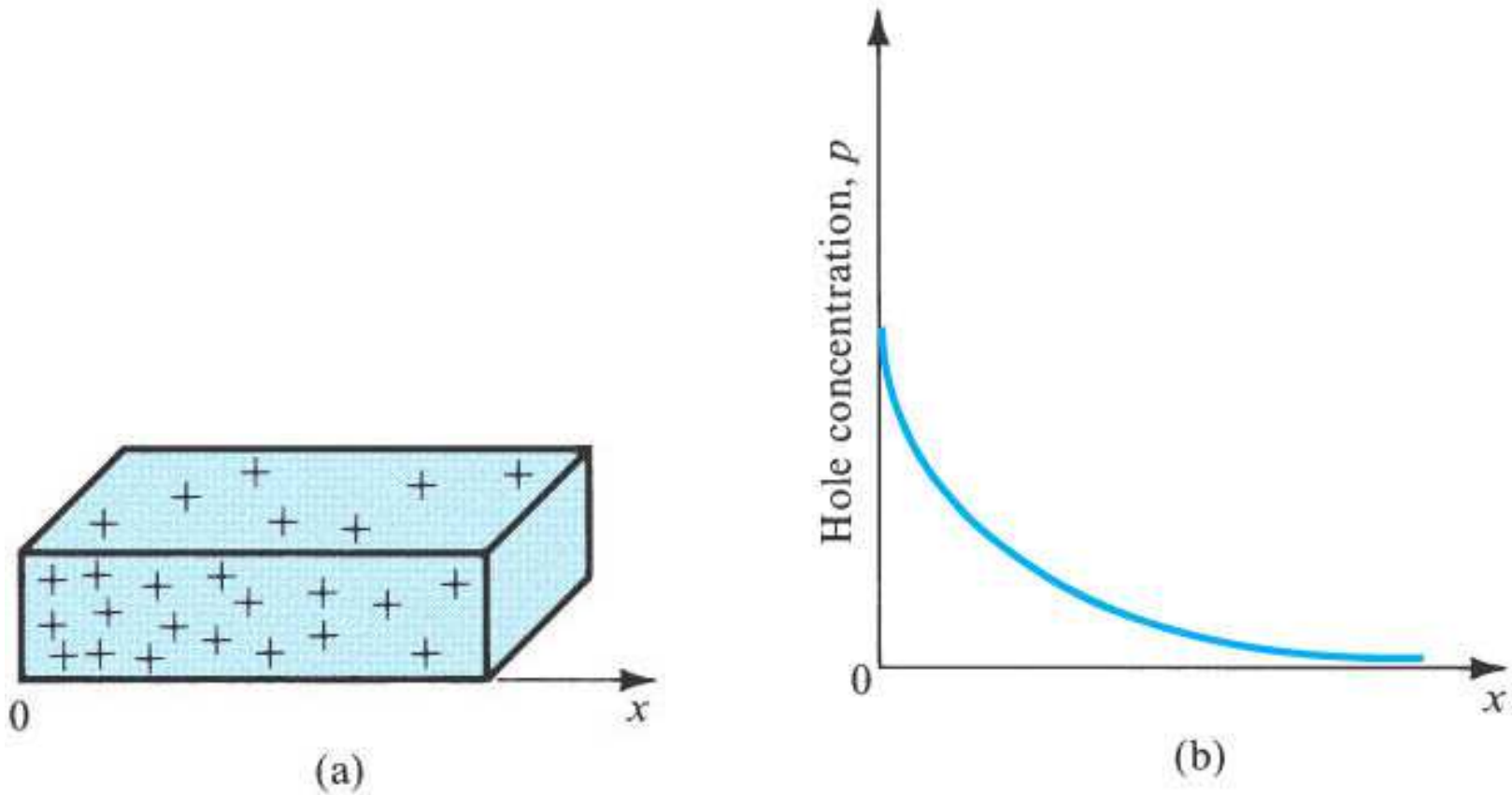

Figure 3.42 A bar of intrinsic silicon **(a)** in which the hole concentration profile shown in **(b)** has been created along the x-axis by some unspecified mechanism.

 Copyright © 2004 by Oxford University Press, Inc.

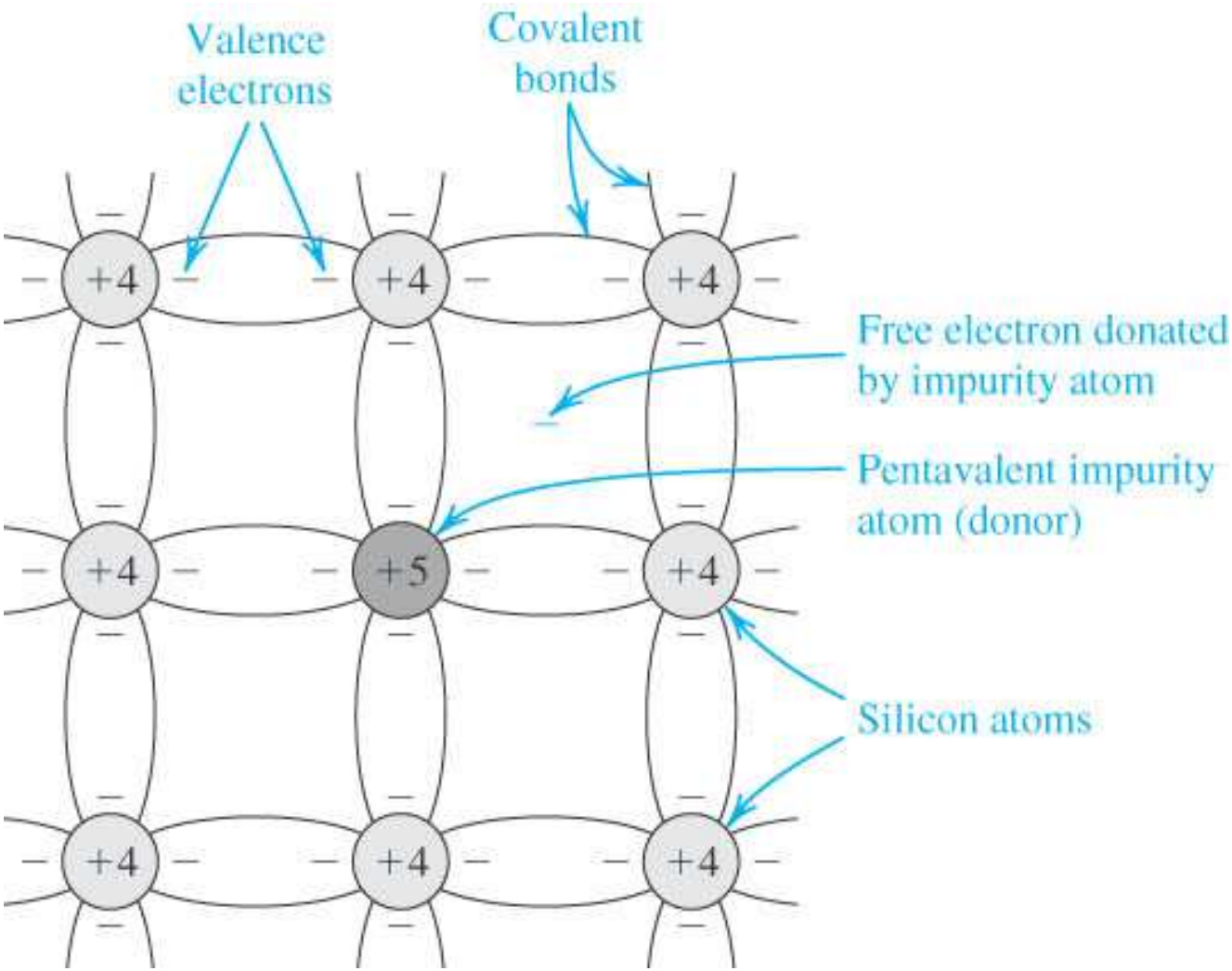

Figure 3.43 A silicon crystal doped by a pentavalent element. Each dopant atom donates a free electron and is thus called a donor. The doped semiconductor becomes *n* type.

 Copyright © 2004 by Oxford University Press, Inc.

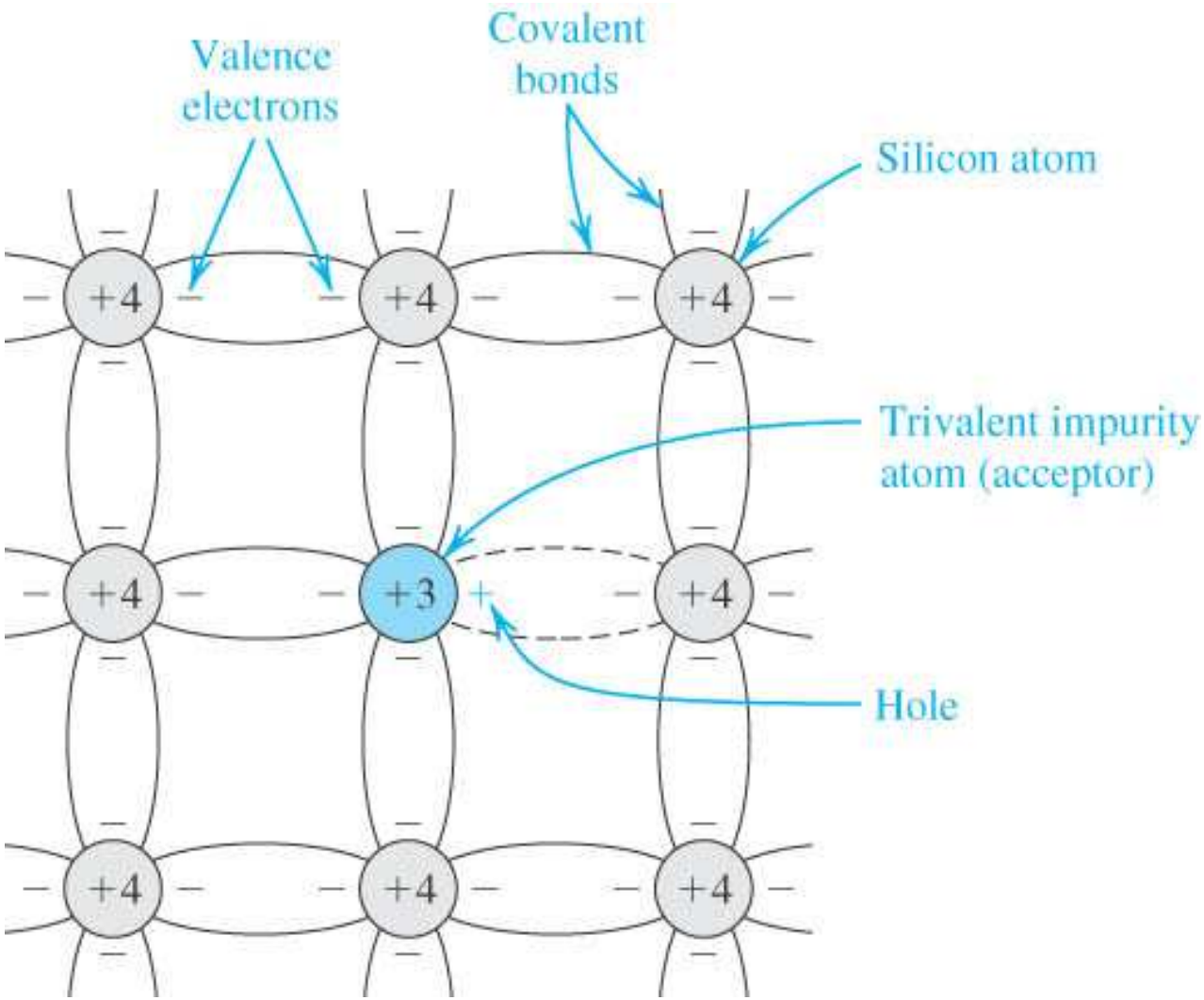

Figure 3.44 A silicon crystal doped with a trivalent impurity. Each dopant atom gives rise to a hole, and the semiconductor becomes *p* type.

 Copyright © 2004 by Oxford University Press, Inc.

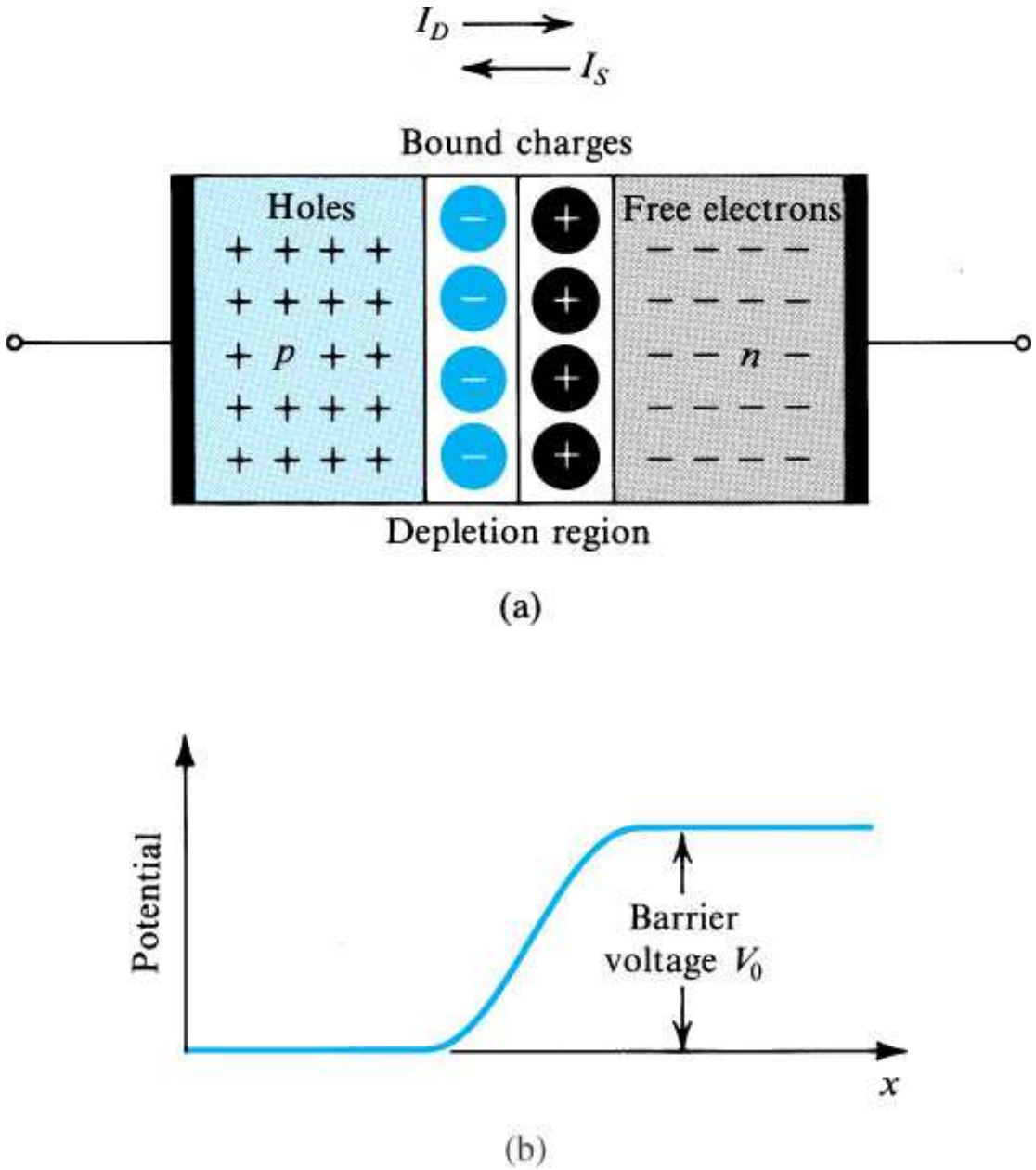

Figure 3.45 **(a)** The *pn* junction with no applied voltage (open-circuited terminals). **(b)** The potential distribution along an axis perpendicular to the junction.

 Copyright © 2004 by Oxford University Press, Inc.

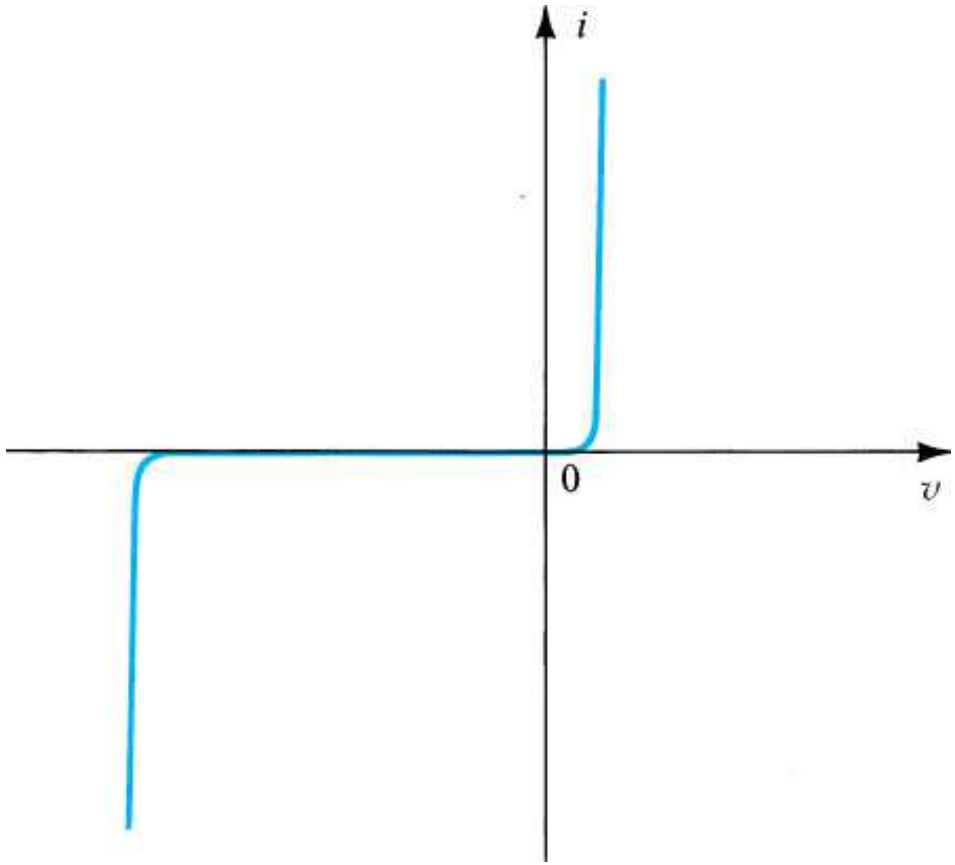

Figure 3.7 The *i*–*v* characteristic of a silicon junction diode.

 Copyright © 2004 by Oxford University Press, Inc.

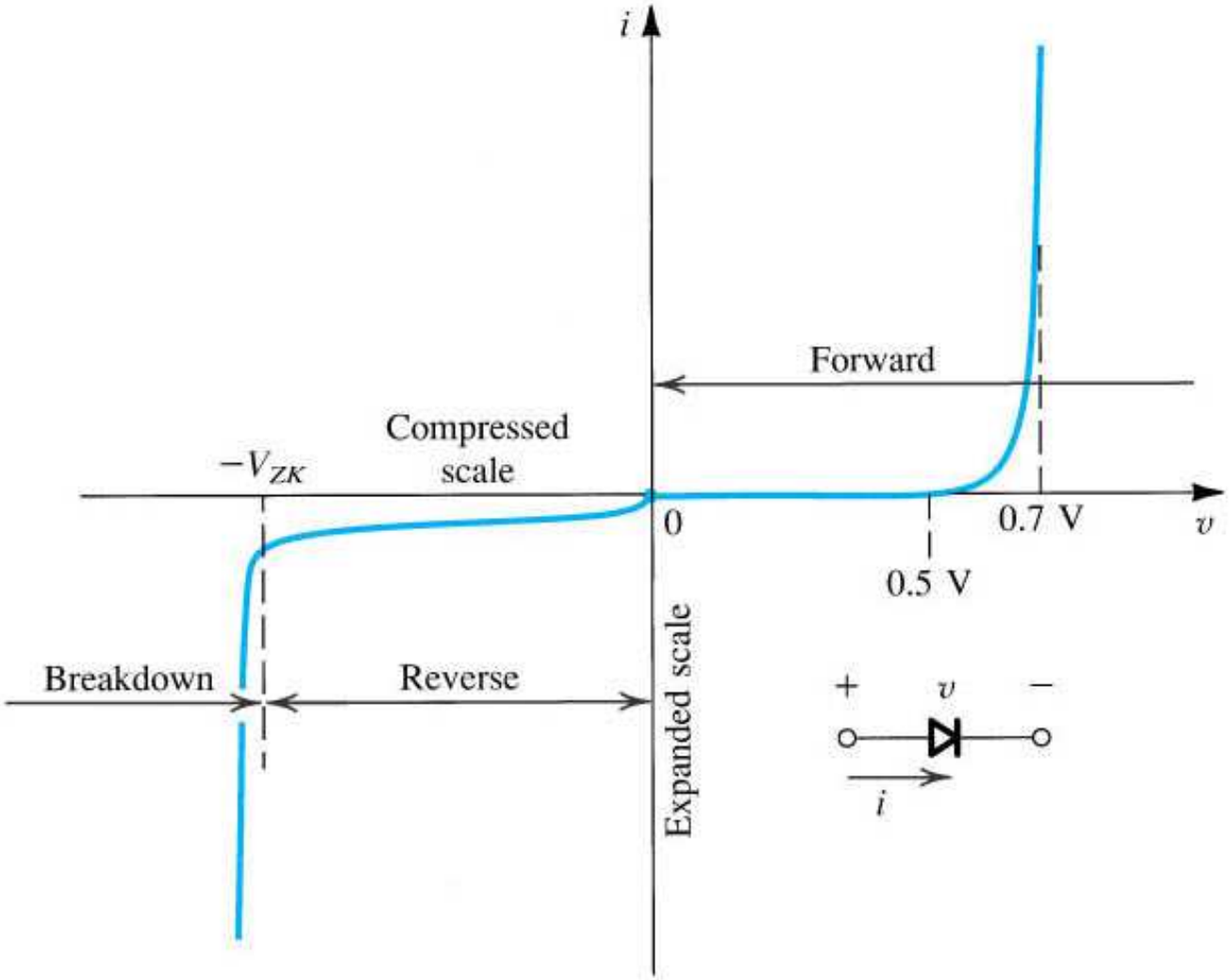

Figure 3.8 The diode *i–v* relationship with some scales expanded and others compressed in order to reveal details.

 Copyright © 2004 by Oxford University Press, Inc.

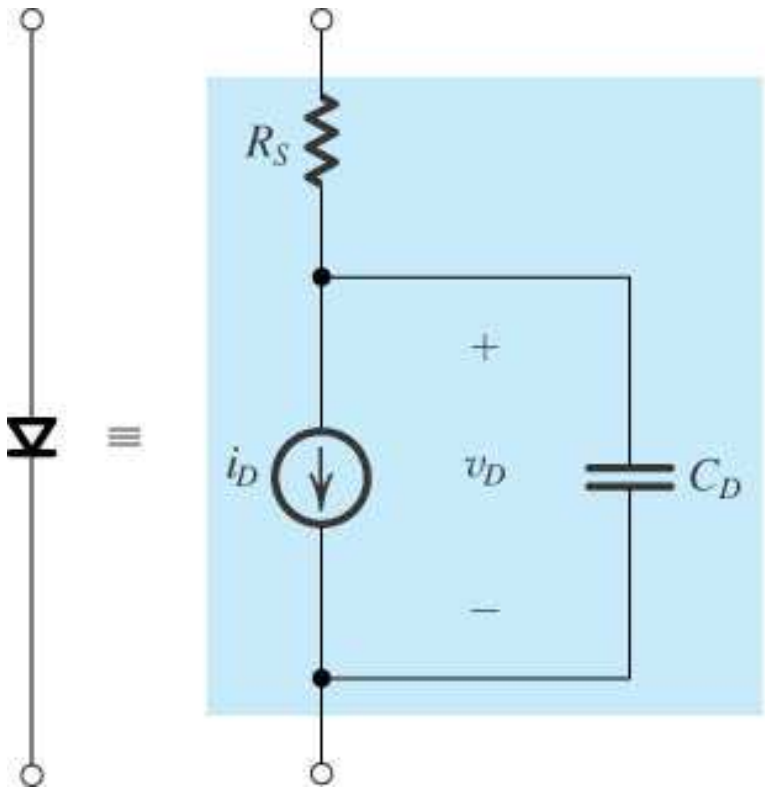

$$i_D = I_S\left(e^{v_D/nV_T} - 1\right)$$

$$C_D = C_d + C_j = \frac{\tau_T}{V_T} I_S e^{v_D/nV_T} + C_{j0}\Big/\left(1 - \frac{v_D}{V_0}\right)^m$$

$$I_D = I_S\,(e^{qV_D/NkT} - 1)$$

Where,

I_D = Diode current in amps

I_S = Saturation current in amps (typically 1×10^{-12} amps)

e = Euler's constant (~ 2.718281828)

q = charge of electron (1.6×10^{-19} coulombs)

V_D = Voltage applied across diode in volts

N = "Nonideality" or "emission" coefficient (typically between 1 and 2)

k = Boltzmann's constant (1.38×10^{-23})

T = Junction temperature in Kelvins

Figure 3.51 The SPICE diode model.

Copyright © 2004 by Oxford University Press, Inc.

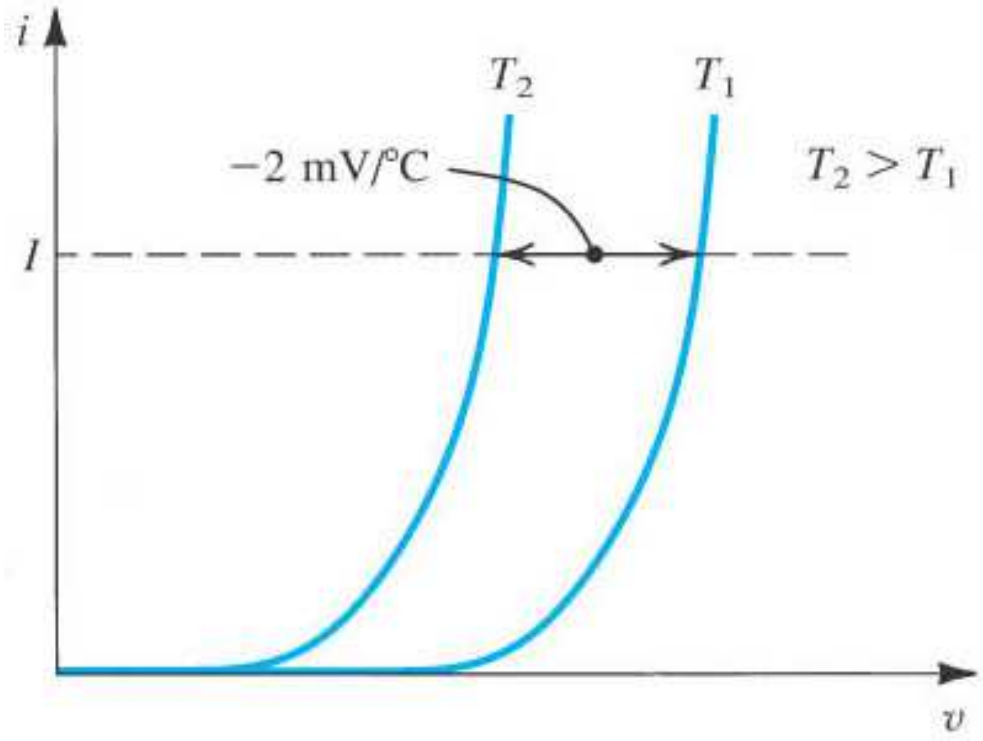

Figure 3.9 Illustrating the temperature dependence of the diode forward characteristic. At a constant current, the voltage drop decreases by approximately 2 mV for every 1°C increase in temperature.

 Copyright © 2004 by Oxford University Press, Inc.

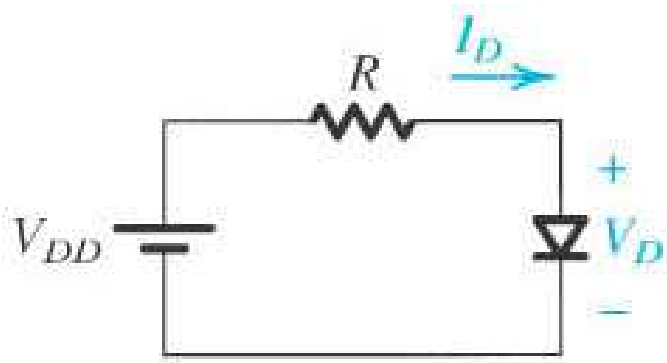

Figure 3.10 A simple circuit used to illustrate the analysis of circuits in which the diode is forward conducting.

 Copyright © 2004 by Oxford University Press, Inc.

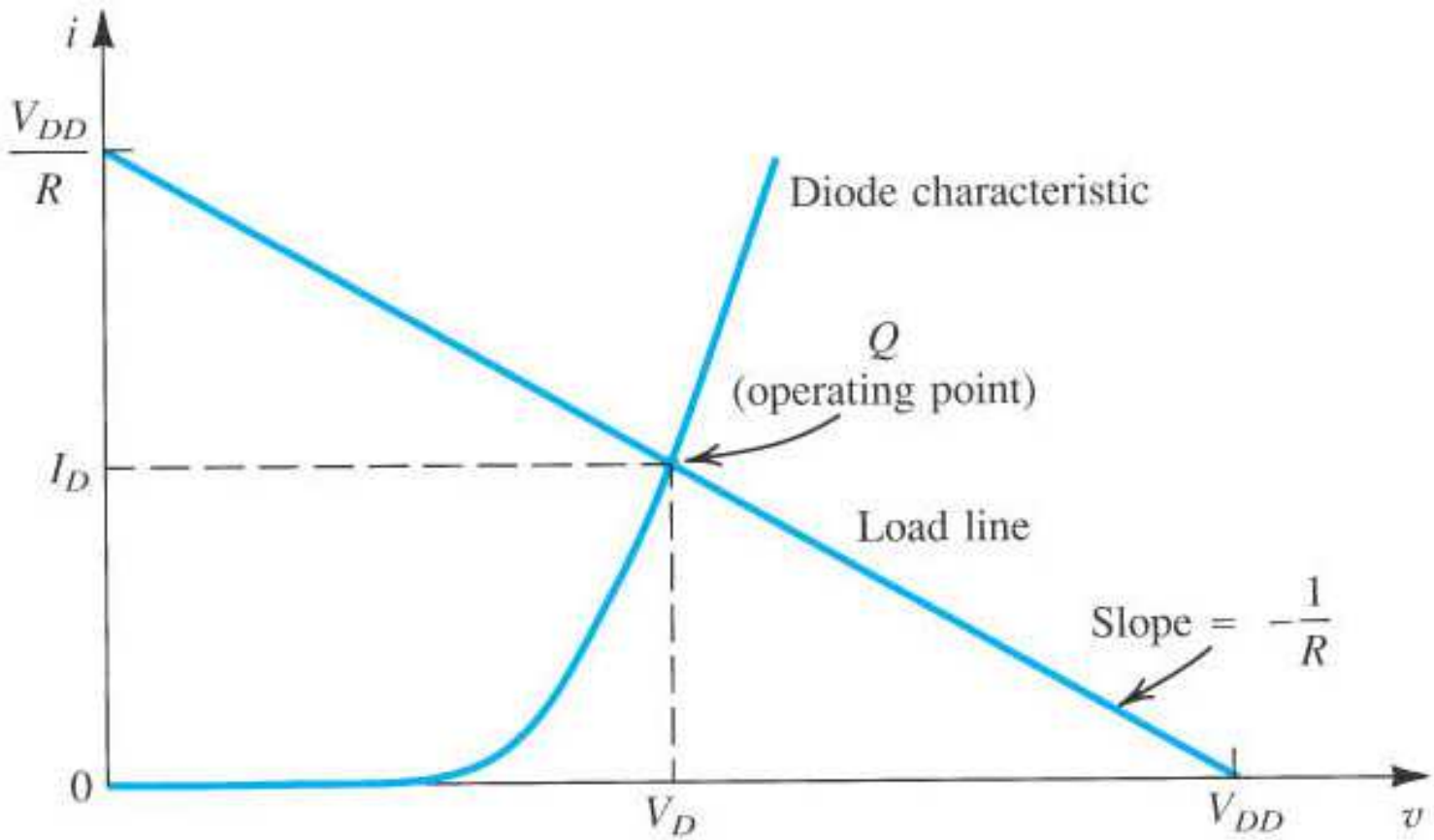

Figure 3.11 Graphical analysis of the circuit in Fig. 3.10 using the exponential diode model.

 Copyright © 2004 by Oxford University Press, Inc.

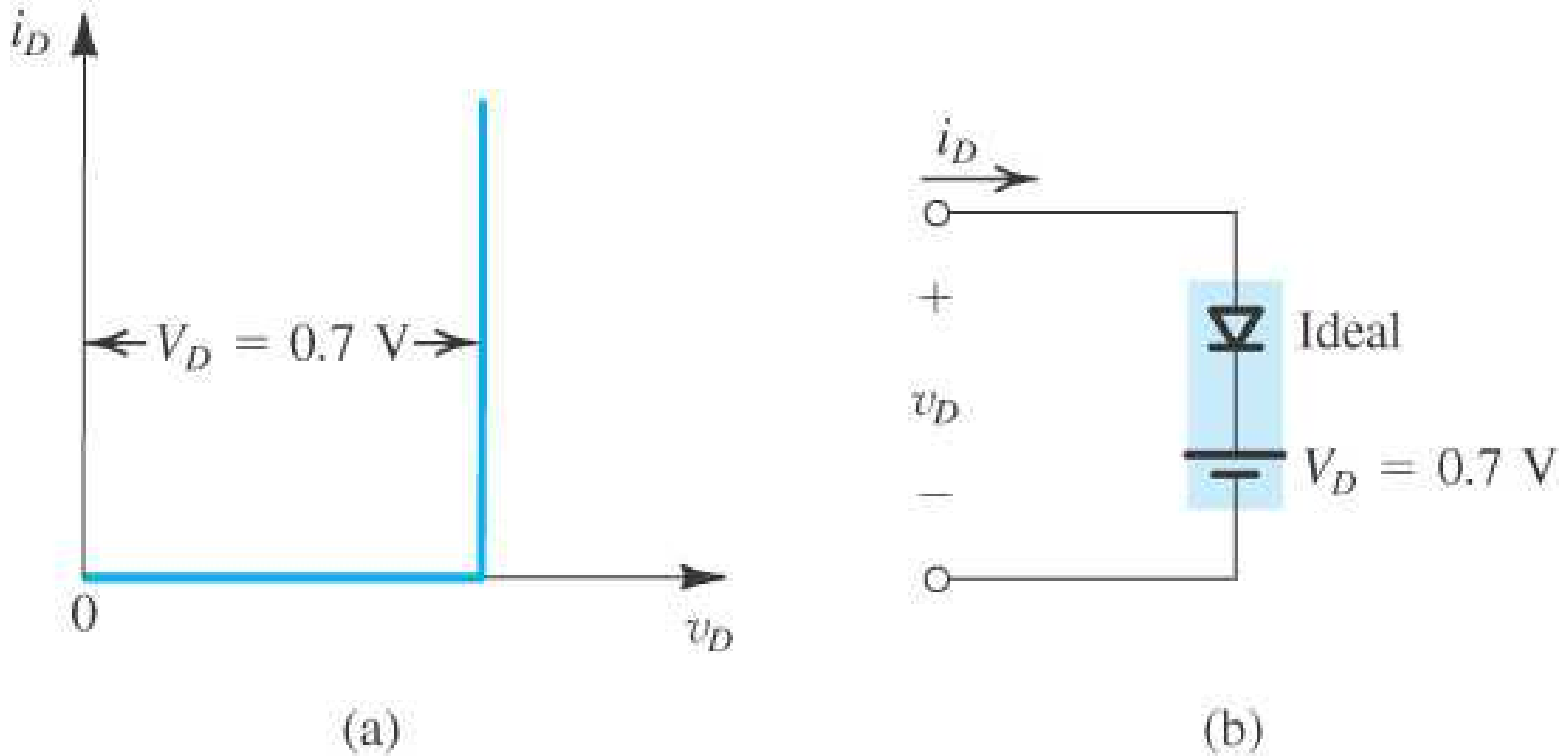

Figure 3.16 The constant-voltage-drop model of the diode forward characteristics and its equivalent-circuit representation.

 Copyright © 2004 by Oxford University Press, Inc.

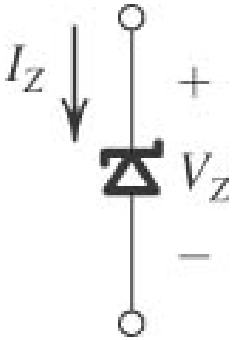

Figure 3.20 Circuit symbol for a zener diode.

 Copyright © 2004 by Oxford University Press, Inc.

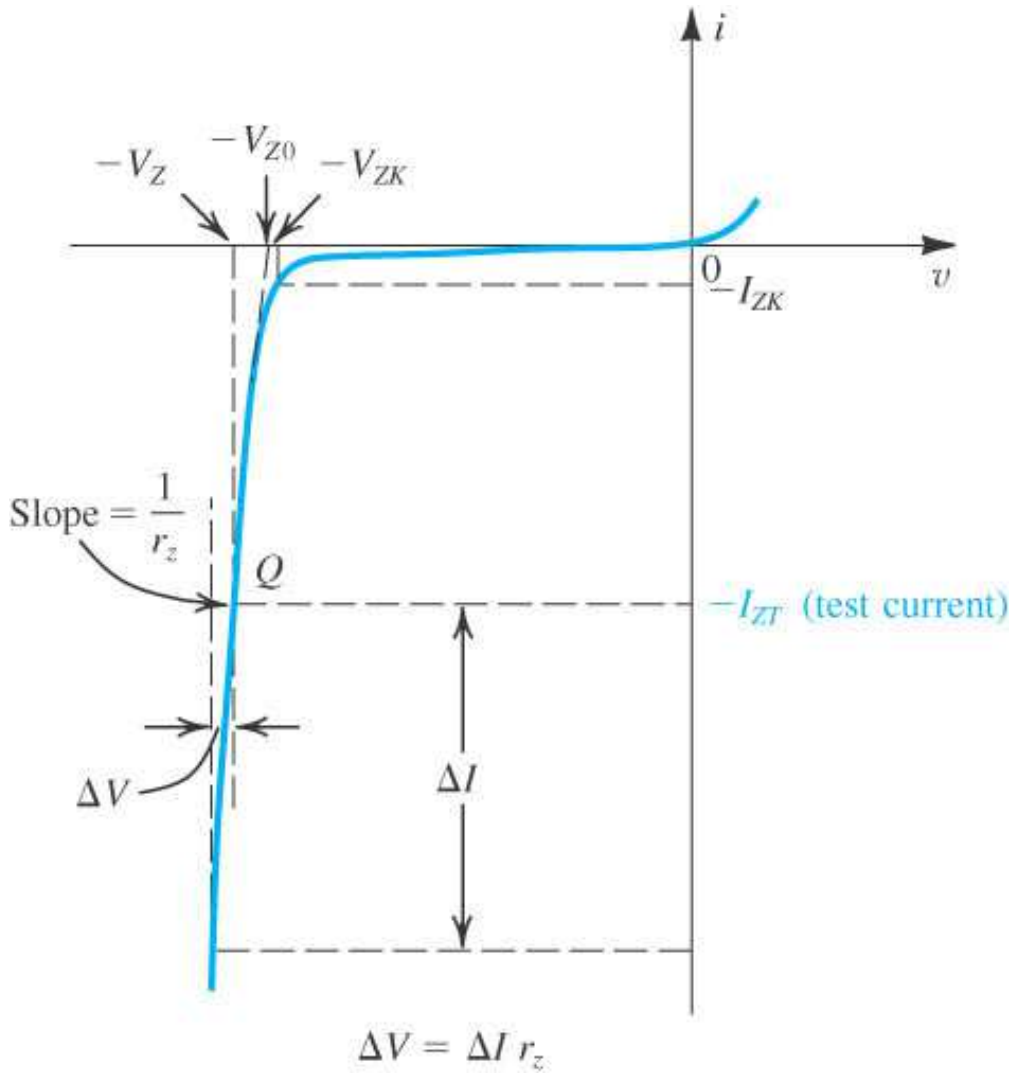

Figure 3.21 The diode *i–v* characteristic with the breakdown region shown in some detail.

 Copyright © 2004 by Oxford University Press, Inc.

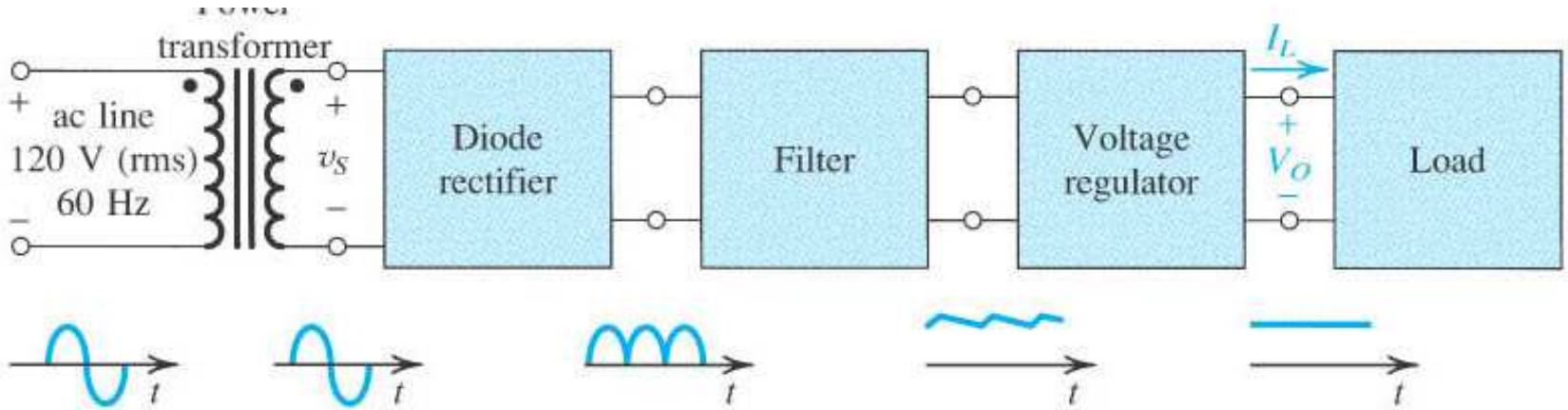

Figure 3.24 Block diagram of a dc power supply.

 Copyright © 2004 by Oxford University Press, Inc.

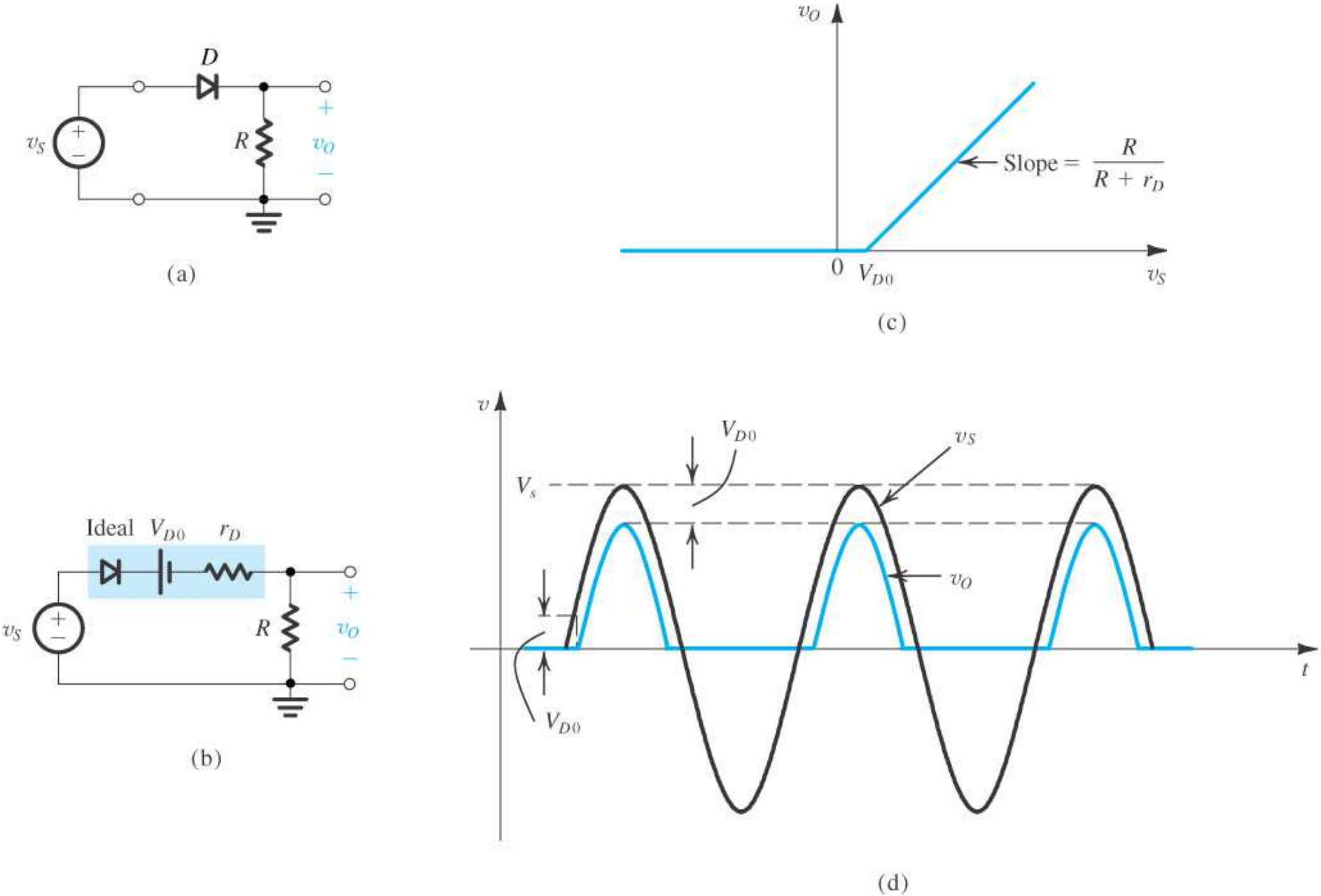

Figure 3.25 **(a)** Half-wave rectifier. **(b)** Equivalent circuit of the half-wave rectifier with the diode replaced with its battery-plus-resistance model. **(c)** Transfer characteristic of the rectifier circuit. **(d)** Input and output waveforms, assuming that r_D ! R.

 Copyright © 2004 by Oxford University Press, Inc.

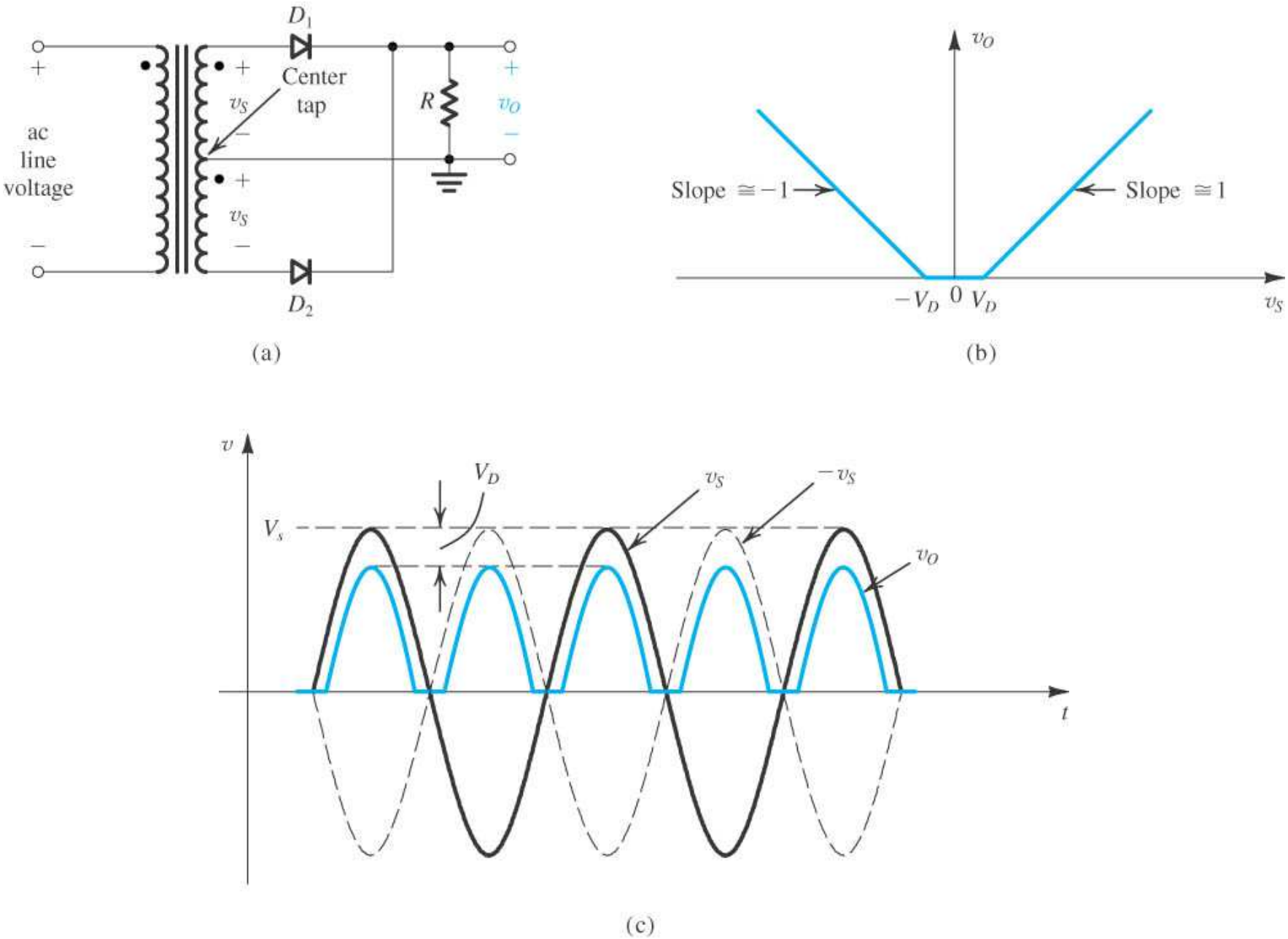

Figure 3.26 Full-wave rectifier utilizing a transformer with a center-tapped secondary winding: **(a)** circuit; **(b)** transfer characteristic assuming a constant-voltage-drop model for the diodes; **(c)** input and output waveforms.

 Copyright © 2004 by Oxford University Press, Inc.

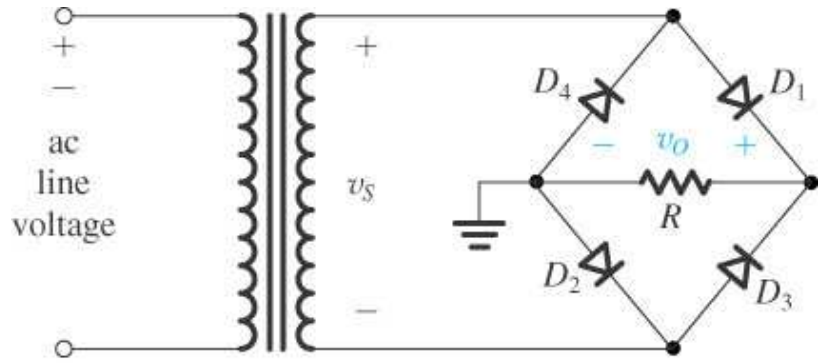

(a)

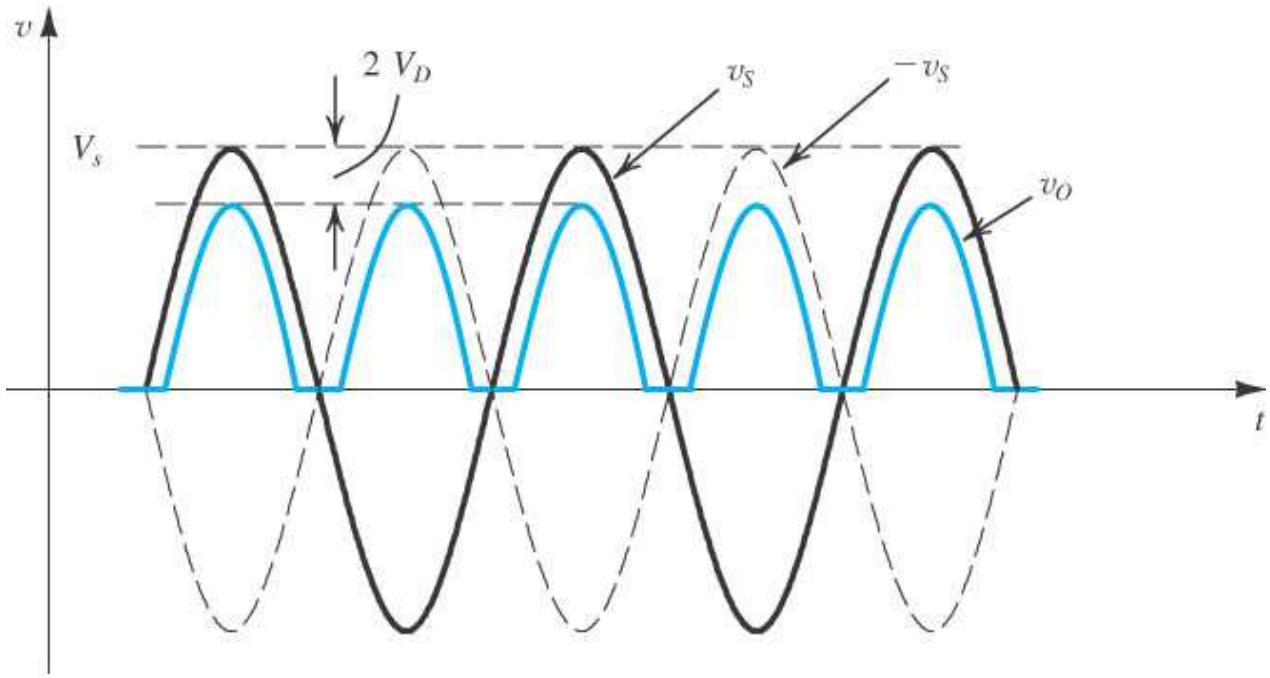

(b)

Figure 3.27 The bridge rectifier: **(a)** circuit; **(b)** input and output waveforms.

 Copyright © 2004 by Oxford University Press, Inc.

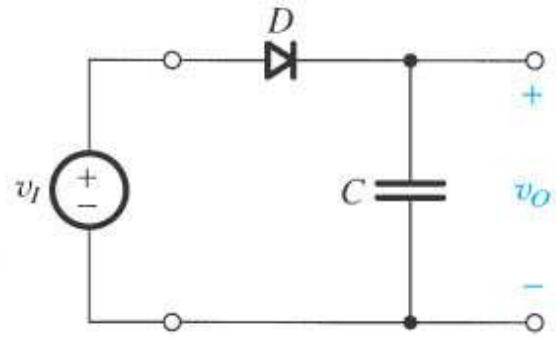

(a)

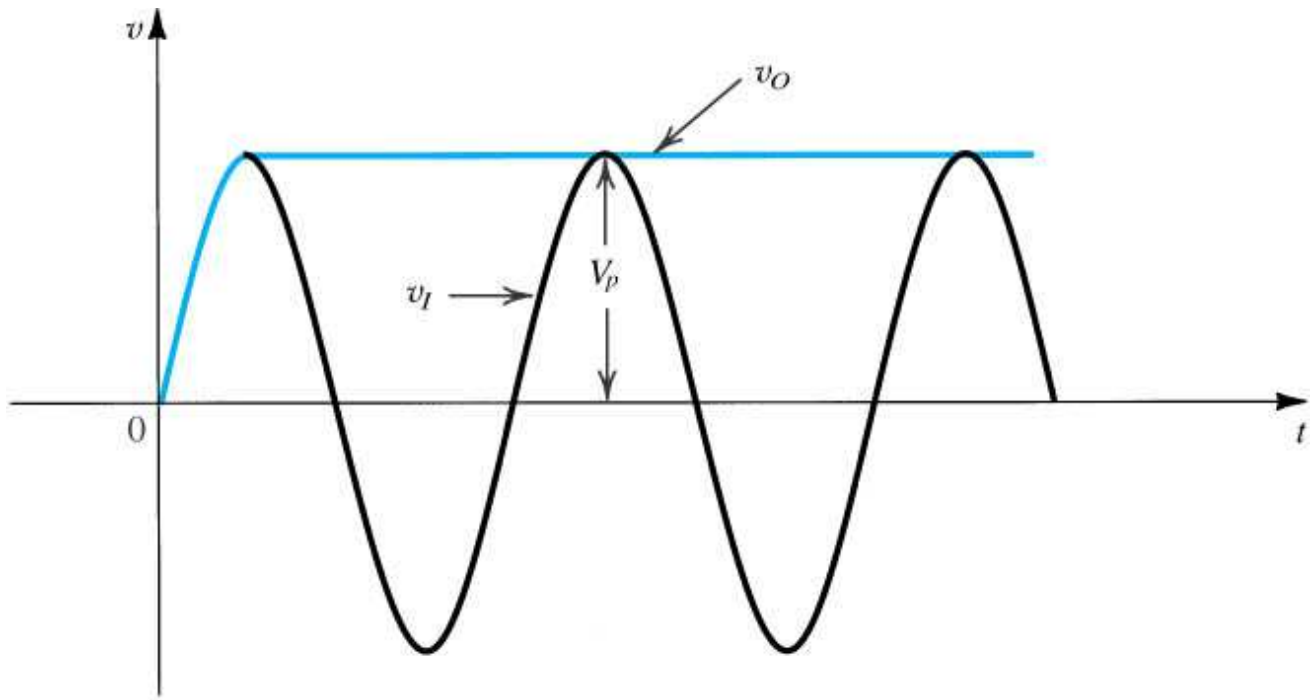

(b)

Figure 3.28 **(a)** A simple circuit used to illustrate the effect of a filter capacitor. **(b)** Input and output waveforms assuming an ideal diode. Note that the circuit provides a dc voltage equal to the peak of the input sine wave. The circuit is therefore known as a peak rectifier or a peak detector.

 Copyright © 2004 by Oxford University Press, Inc.

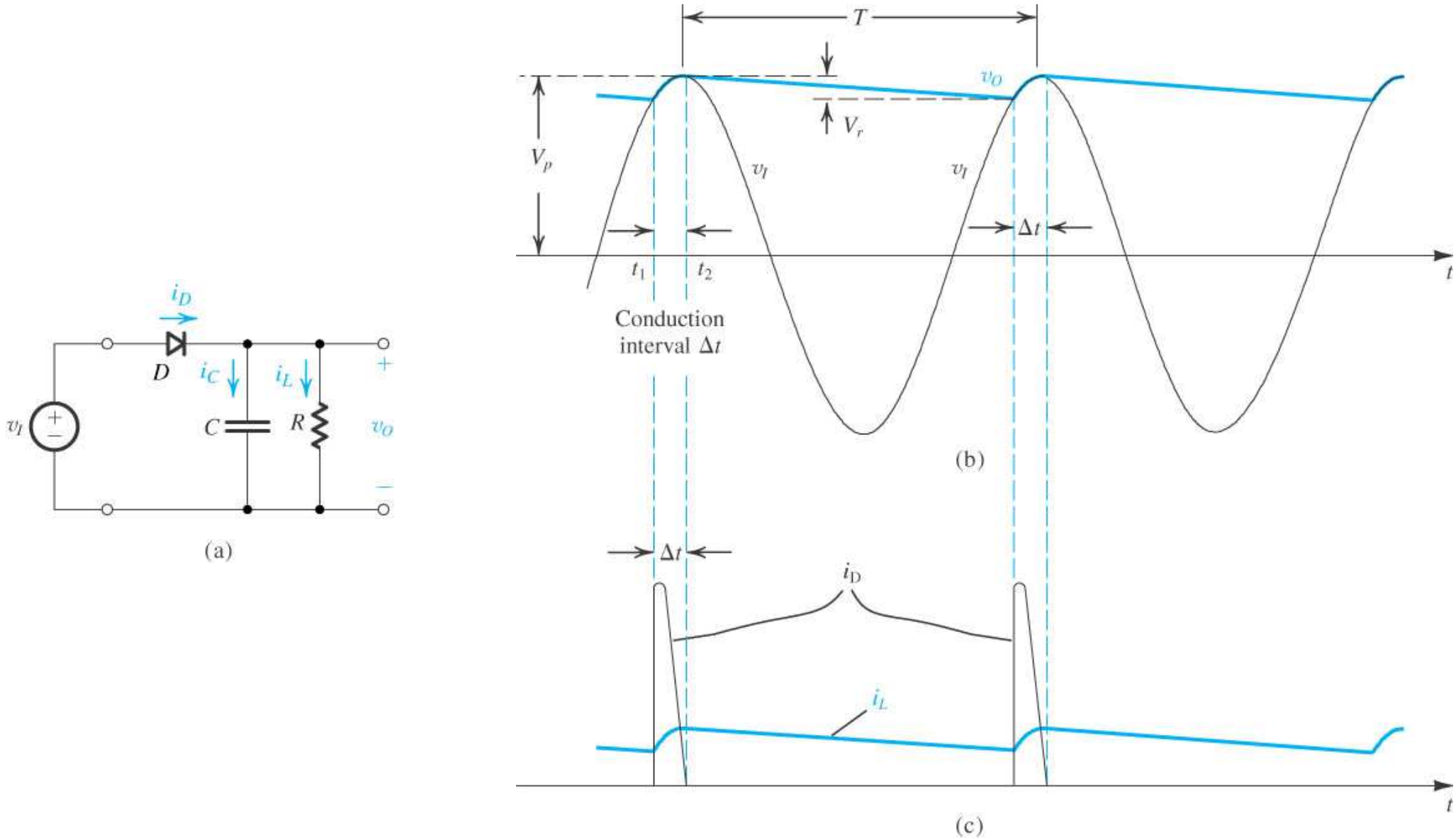

Figure 3.29 Voltage and current waveforms in the peak rectifier circuit with CR @ T. The diode is assumed ideal.

 Copyright © 2004 by Oxford University Press, Inc.

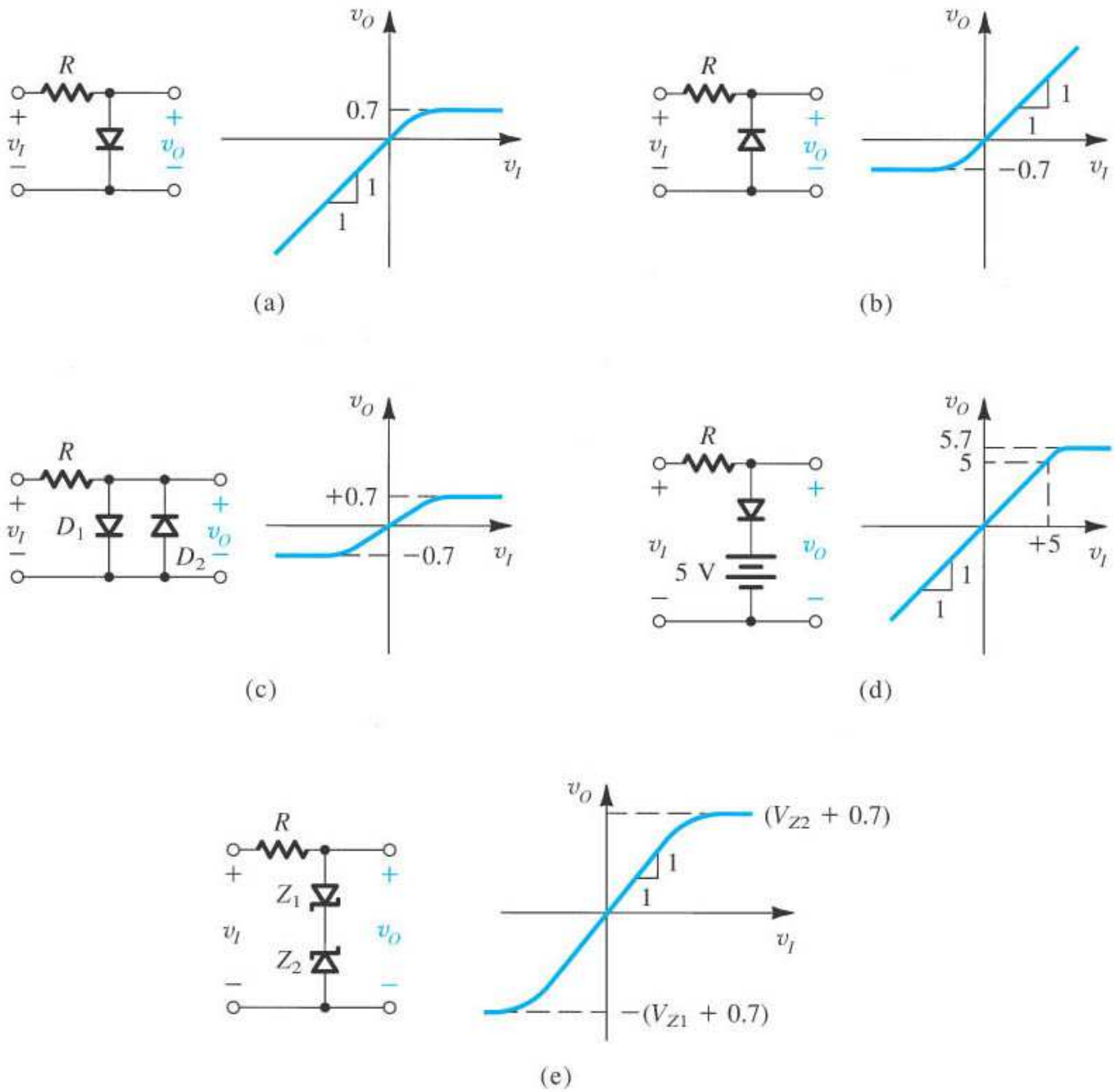

Figure 3.35 A variety of basic limiting circuits.

 Copyright © 2004 by Oxford University Press, Inc.

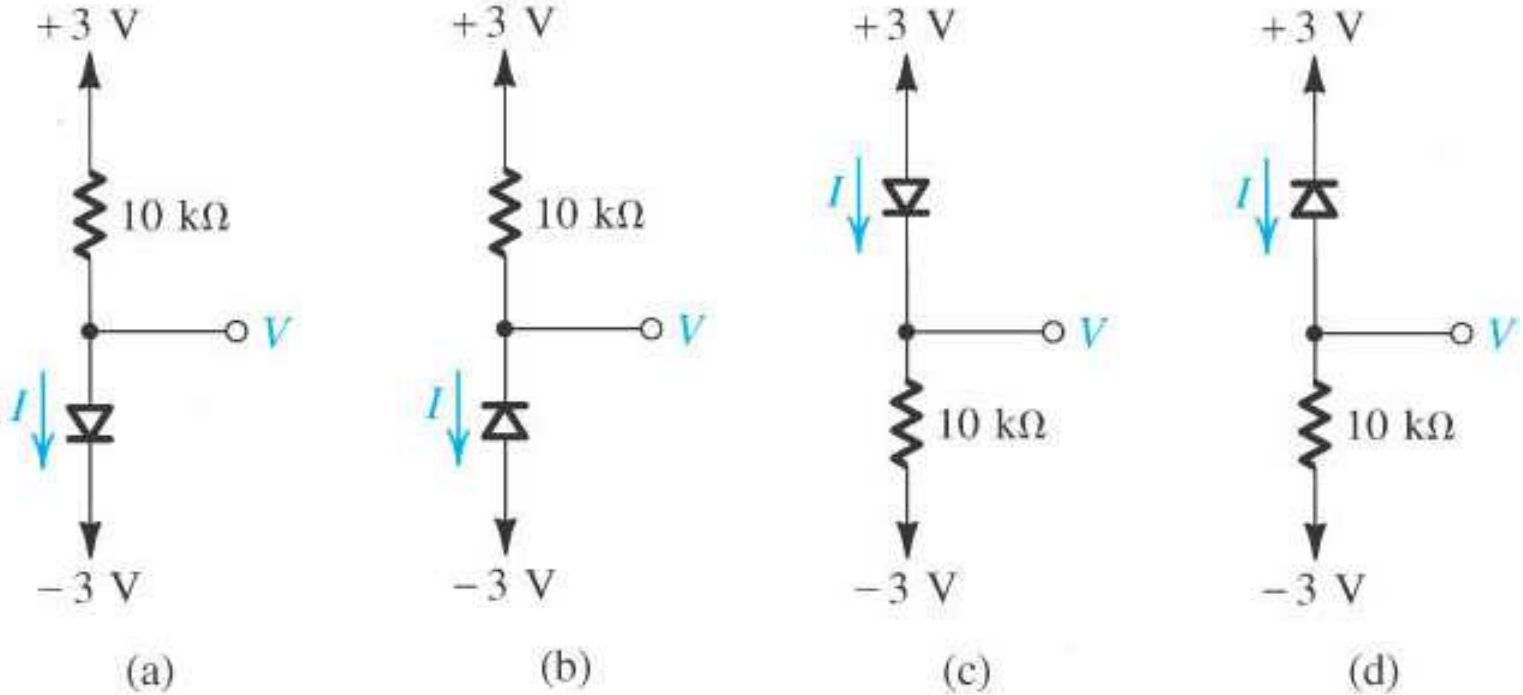

Figure P3.2

 Copyright © 2004 by Oxford University Press, Inc.

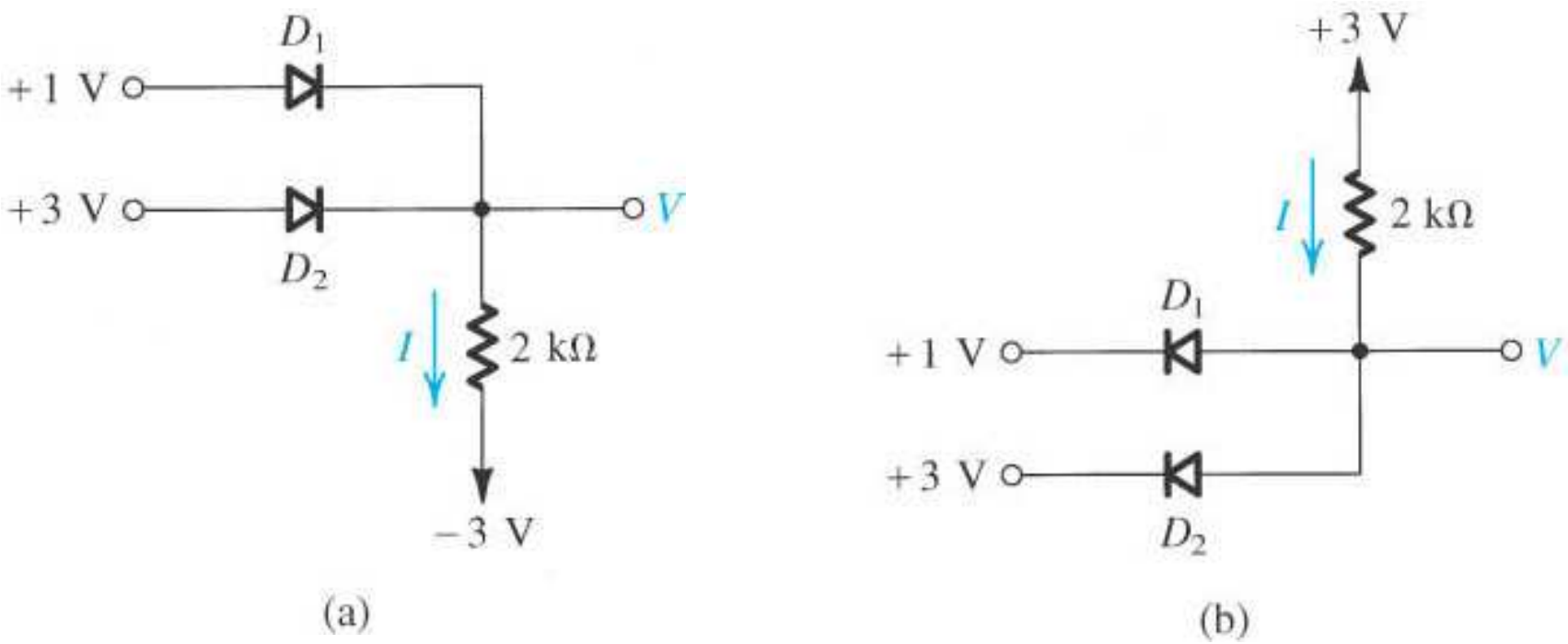

Figure P3.3

 Copyright © 2004 by Oxford University Press, Inc.

Light Emitting Diodes (LEDs)

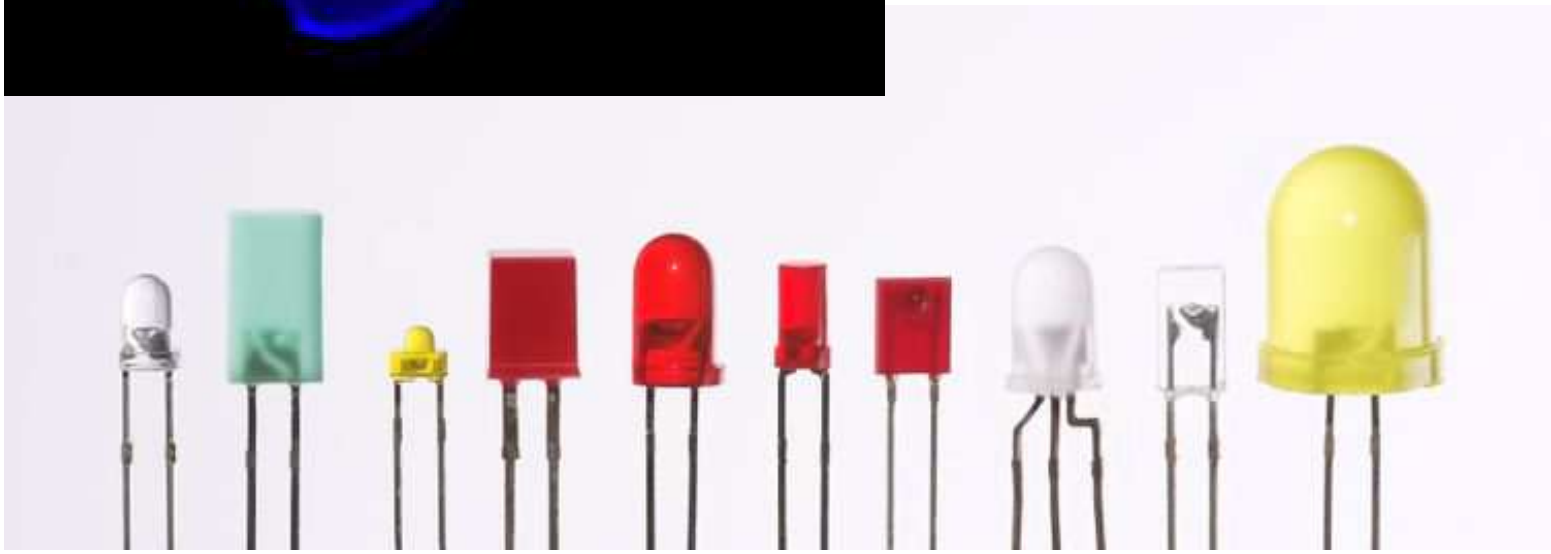

Images are from www.wikidepia.com

Copyright © 2004 by Oxford University Press, Inc.

LEDs

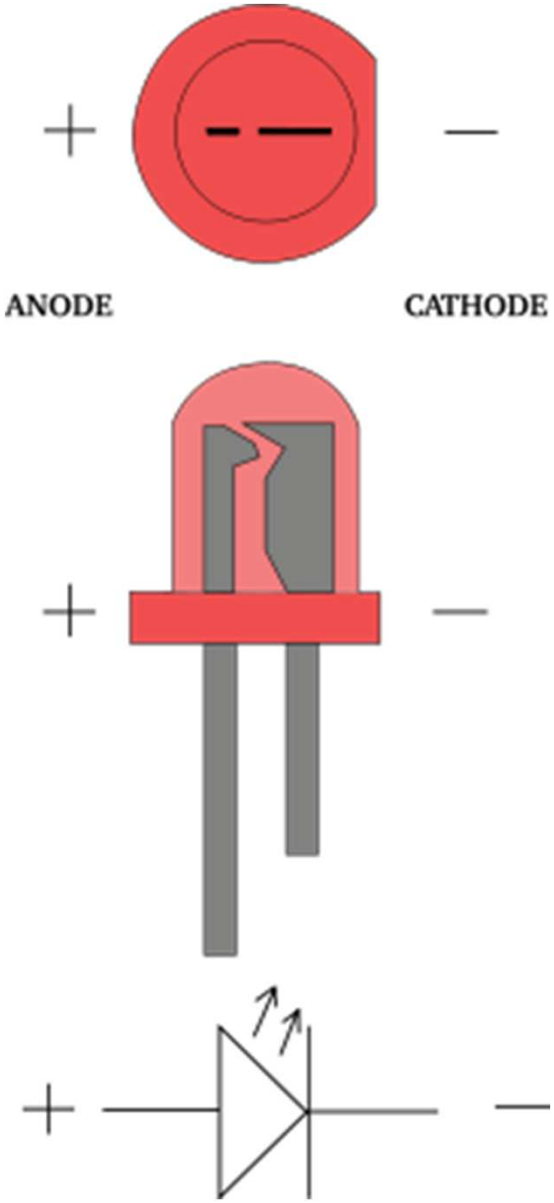

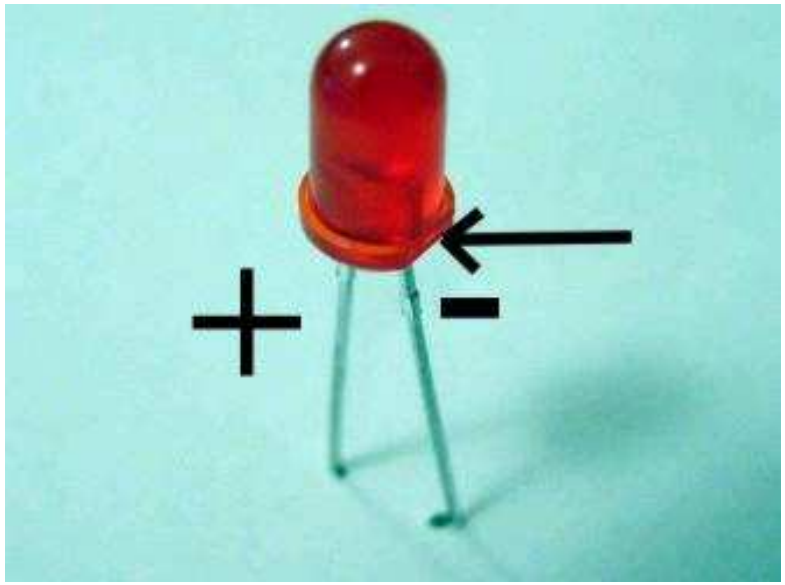

Images are from www.wikipedia.com

Copyright © 2004 by Oxford University Press, Inc.

Connecting LED to microprocessor

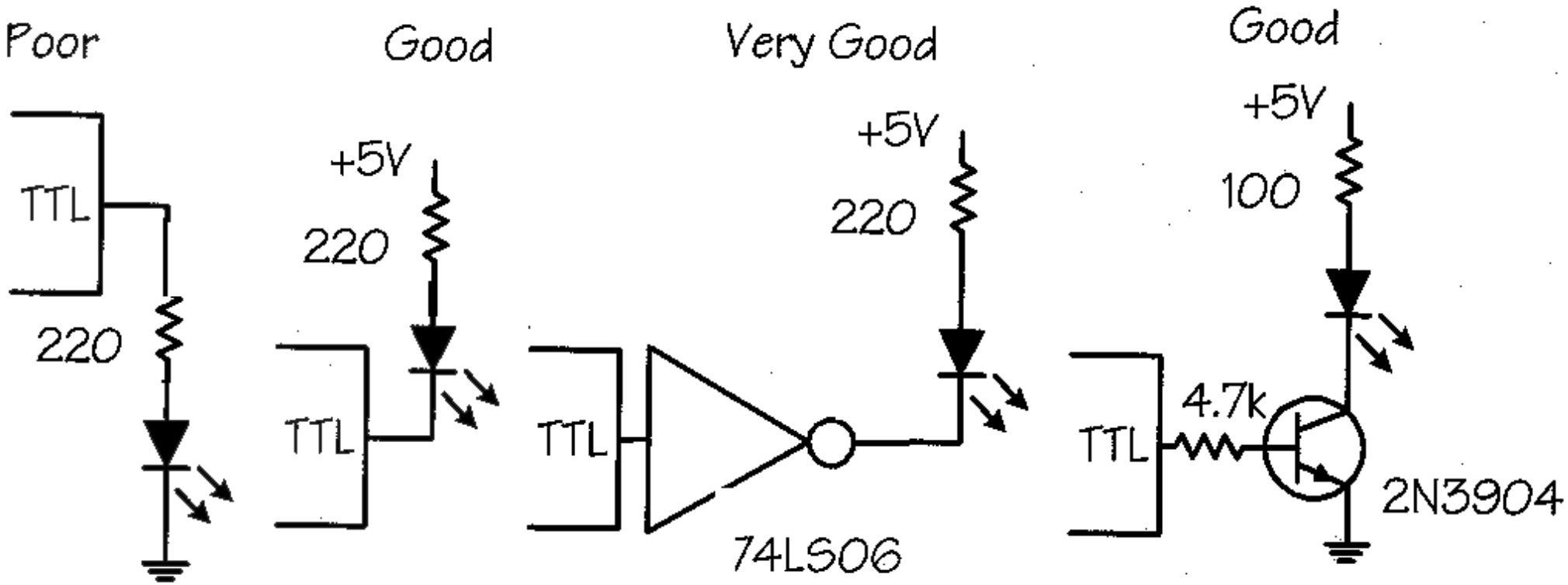

Slide credits: Dr.Krerk Piromsopa

Copyright © 2004 by Oxford University Press, Inc.